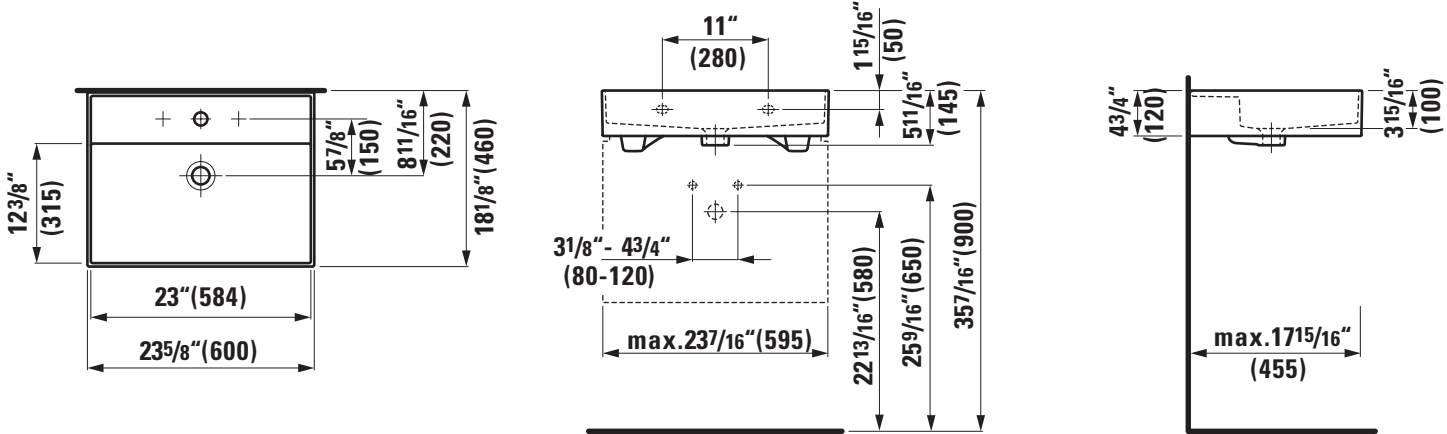
12 3/8"
(315)
5 7/8"
(150)
8 11/16"
(220)
18 1/8"(460)
23"(584)
23 5/8"(600)
11"
(280)
1 15/16"
(50)
5 11/16"
(145)
3 1/8"- 4 3/4"
(80-120)
max.23 7/16"(595)
22 13/16"(580)
25 9/16"(650)
35 7/16"(900)
4 3/4"
(120)
3 15/16"
(100)
max.17 15/16"
(455)