STEP 4
(Recommended for professional installers only.)
Install faucets and other accessories such as a side spray or soap/lotion dispenser onto the sink. (Do not install drainer basket until the sink is in place.)

ADDITIONAL HOLE KNOCKOUTS FOR SINKS

Please be sure to make any additional accessory holes before sink installation.

(1) Holes for faucet fixtures and accessories have been pre-drilled from underneath and are marked on the top surface by white dots centered above the holes. Make sure you check the current position of the dots before you hammer, as dots may shift in very hot weather.
(2) Put the foam packing parts back into the box and place sink on top of box.
(3) Tap the white dots over the pre-cut holes lightly with a 6 ounce ball peen hammer (While holding your hand against the underside of the hole to support the sink).
(4)Trim the hole with the small end of the ball peen hammer or use a fine file.

WARNING: WARRANTY WILL BE VOIDED IF THESE INSTRUCTIONS ARE NOT FOLLOWED.

STEP 5
(Recommended for professional installers only.)
Snap mounting clips into position on the sink at evenly spaced intervals.

STEP 6
(Recommended for professional installers only.)
Run a bead of the appropriate sealant inside the masking tape.

STEP 7
(Recommended for professional Installers only.)
Lower the sink into the hole, following the guidelines created by the masking tape. Turn mounting clips against the underside of the guidelines created and tighten with screw driver.

STEP 8
(Recommended for professional Installers only.)
Remove excess sealant if any.Install strainer basket

© 2012-04-L Kingston Brass

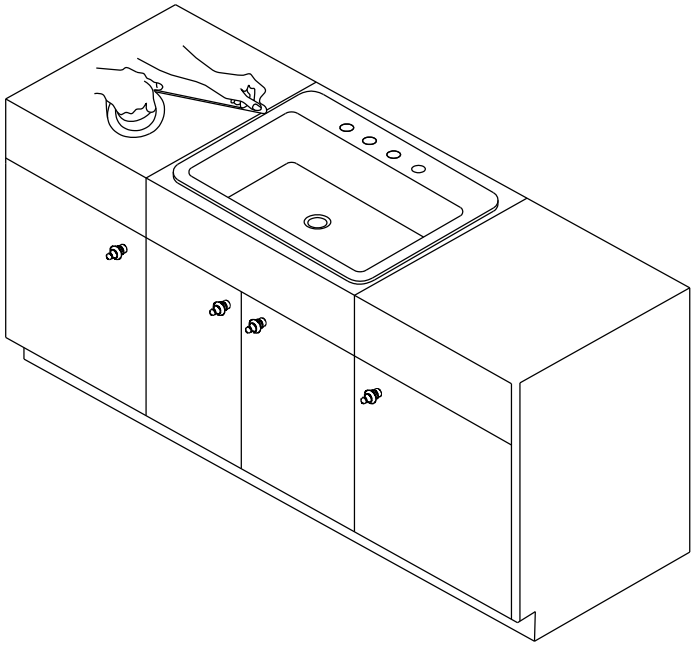

www.kingstonbrass.com
TOLL-FREE CUSTOMER SERVICE: 1-877-2-KBRASS
TECHNICAL SUPPORT E-mail: service@kingstonbrass.com
12775 Reservoir Street, Chino, CA91710

KINGSTON BRASS INSTALLATION INSTRUCTIONS
SELF-RIMMING SINK

These instructions are for installing Kingston Brass self-rimming stainless steel sink and self-rimming Sinks are sinks that are installed from above the countertop and sealed to the top of the counter.
If you are Installing another type of sink, such as an undermount sink which sits below the countertop, please refer to instructions specifically for those sinks.
Templates are supplied only as a guide.
The physical use of the sink will ensure a more accurate cutout.

Note:
It is recommended that all countertops be cut by an approved or certified installer and that. The sinks be installed by the installer whenever possible. The countertop/sink unit ideally should be Installed as one on the jobsite.
Before installing the sink, inspect it for damage. Do not install a damaged unit.
Remember, it is your responsibility to follow all local plumbing and building codes.
The warranty will be voided if these installation instructions are not followed.

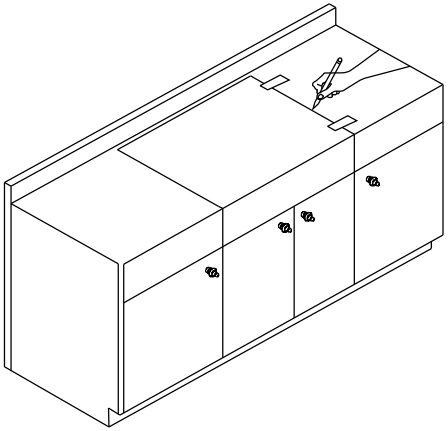

STEP 1
(Recommended for professional Installers only.)
Cut out the template and place it on the countertop, making sure that the sink front is Parallel to the front of the counter. Be sure the sink is properly centered, both front to back and side to side.
Check for adequate clearance relative to cabinet walls and pull-out or tilt-down drawers.
Tape the template in place.Trace around the template.

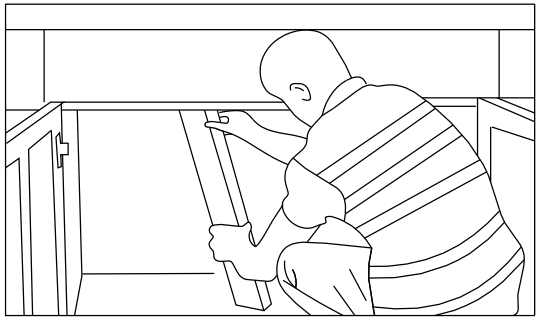

STEP 2
(Recommended for professional Installers only.)
Place a brace under the countertop to support the sink cutout area.
This will also make it easier to do the sink cutout. Cut the countertop along the template line with the proper tool for the countertop material.

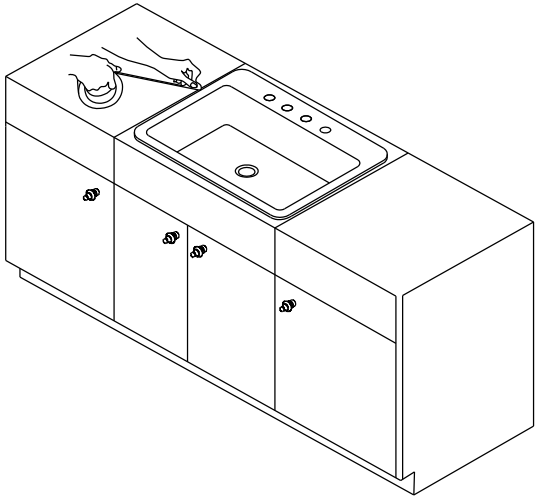

STEP 3
(Recommended for professional Installers only.)
Trial for the sink, by inserting it into the countertop to test whether the cutout is the correct size. Mark the edge of the sink with masking tape on the countertop.
Remove the sink and make any necessary adjustments in the cutout or placement, (the easiest way to handle the sink is via the drain hole or holes, especially if it's a double-bowl model.)

KINGSTON BRASS

THE TRADITION OF FINE BRASS

Installation Instructions
For Use With KB's Basket Strainer

NOTE:USE TEFLON TAPE ON ALL THREADED CONNECTIONS

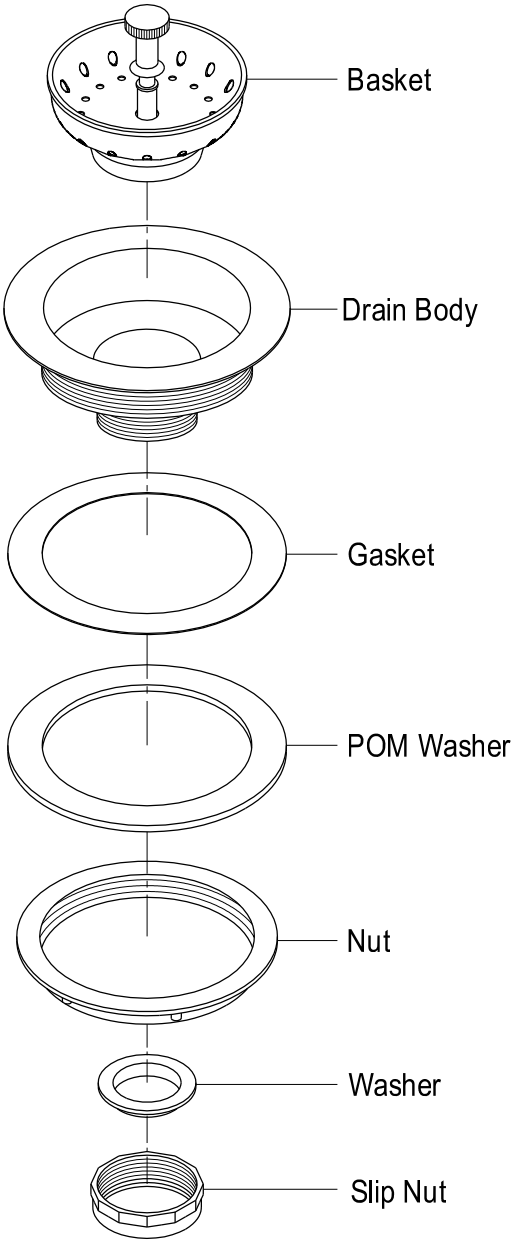

www.kingstonbrass.com
TOLL-FREE CUSTOMER SERVICE: 1-877-2-KBRASS
TECHNICAL SUPPORT E-mail: service@kingstonbrass.com
12775 Reservoir Street, Chino, CA91710

©2014-02-K Kingston Brass