CRAFTMADE

NEW

Ventura - VEN52

Ventura Ceiling Fan (Blades Included)

- Energy Saving DC Motor
- 6" Downrod (Included)
- 52" Ventura Blades in Cottage White / Driftwood (Included)
- Integrated LED Light Source (Dimmable)
- IDC Remote & Wall Controls (Included)
- Dual Mount (Flat or angled ceiling)
- Remote Dimming

Specs

Blade Sweep Opt (in.)	52
Blades	5
Blade Pitch (deg)	13
Motor Size (MM)	125 x 30
Carton Size (CU FT)	2.30
Bulb CCT	3000
Bulb Wattage	19
CRI	90
Lumens	1095

Dimensions

C:	7.09
D:	5.85
Downrod Length (in.)	6

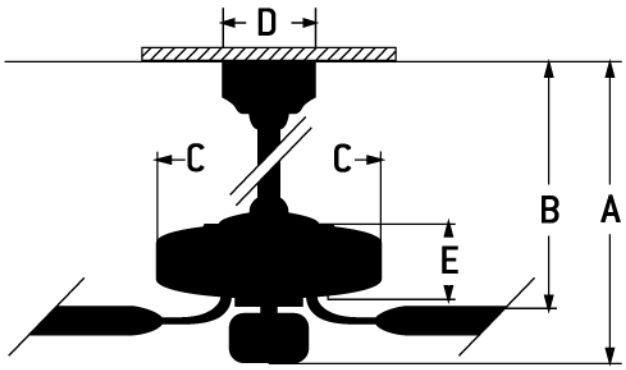

PDFCROWD.COM

Downloads

Ventura - VEN52

PDF Spec Sheet

Installation Guide

Energy Guide

Energy Guide Image

Craftmade • 650 S. Royal Lane • Coppell, TX 75019 • Privacy Policy • Site Map • © 2019 All Rights Reserved

PDFCROWD.COM