Talis C
Talis C 3-Hole Roman Tub Set Trim
Finishes : **chrome** Part no. : **14313001**

Description

Features
- Flow: 5.8 GPM
- 90° ceramic valves
- Solid brass

Required accessories
- Rough, 3-Hole Roman Tub Set (#06607USA)

Item details

List Price $ 570.00

Compliance

ADA UPC C ® MAP

Product image

Scale drawing

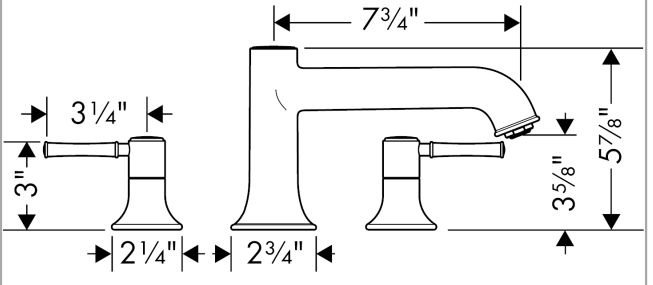

Talis C
Talis C 3-Hole Roman Tub Set Trim
Finishes : **chrome** Part no. : **14313001**

Exploded drawing

Year of production: **>09/09**

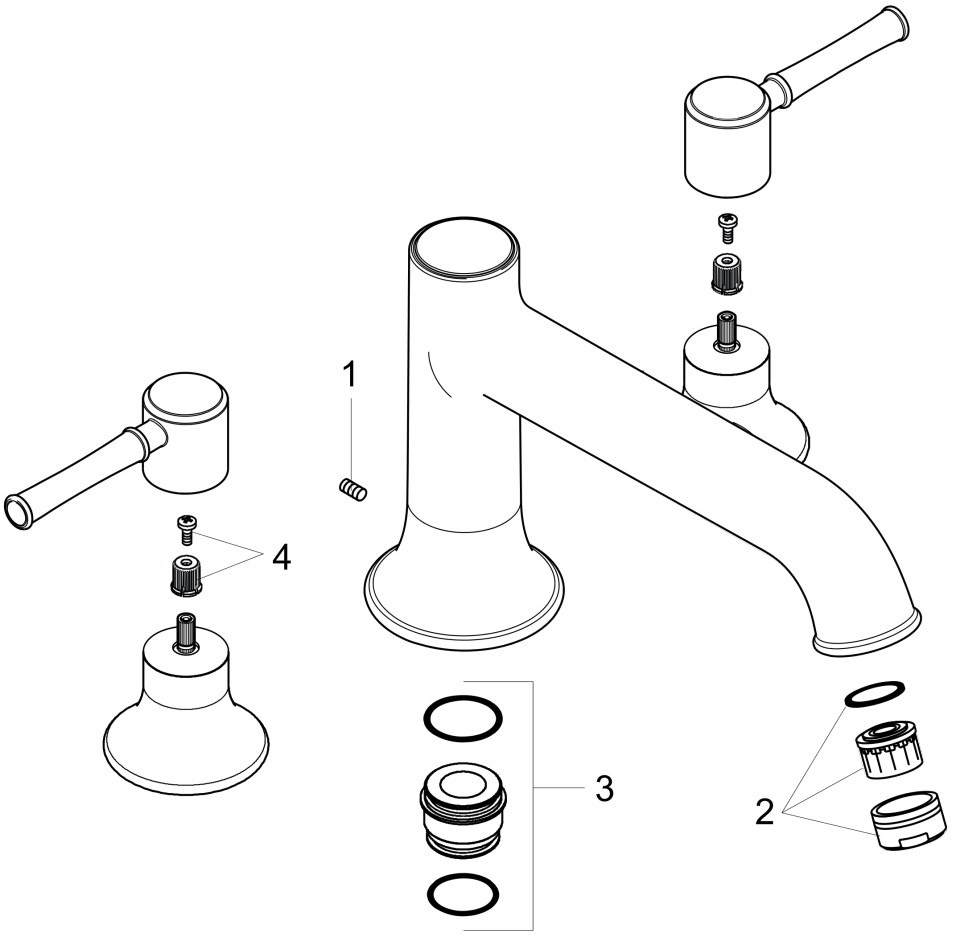

Talis C
Talis C 3-Hole Roman Tub Set Trim
Finishes : **chrome** Part no. : **14313001**

Spare parts list

Year of production: **>09/09**

Pos.	Description	Part no.	Price	PU
1	hollow set screw M6x6	97660000	-	1
2	aerator M24x1 (25 l/min)	13914000	-	1
3	adapter for spout	88512000	-	1
4	handle fixing set	98932000	-	1

Talis C
Talis C 3-Hole Roman Tub Set Trim
Finishes : **brushed nickel** Part no. : **14313821**

Description

Features
- Flow: 5.8 GPM
- 90° ceramic valves
- Solid brass

Required accessories
- Rough, 3-Hole Roman Tub Set (#06607USA)

Item details

List Price $ 810.00

Compliance

ADA

UPC C ®

MAP

Product image

Scale drawing

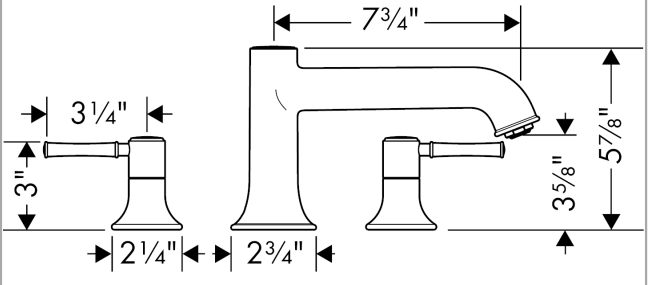

Talis C
Talis C 3-Hole Roman Tub Set Trim
Finishes : **brushed nickel** Part no. : **14313821**

Exploded drawing

Year of production: **>09/09**

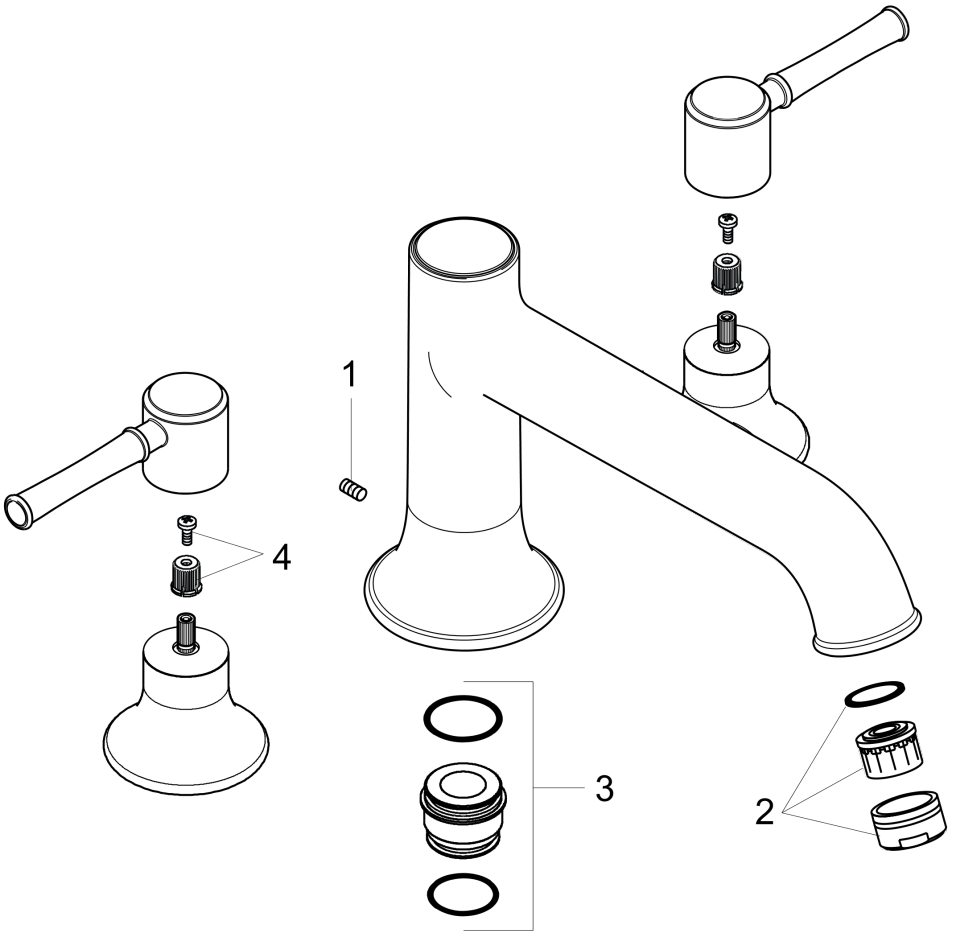

Talis C
Talis C 3-Hole Roman Tub Set Trim
Finishes : **brushed nickel** Part no. : **14313821**

Spare parts list

Year of production: **>09/09**

Pos.	Description	Part no.	Price	PU
1	hollow set screw M6x6	97660000	-	1
2	aerator M24x1 (25 l/min)	13914820	-	1
3	adapter for spout	88512000	-	1
4	handle fixing set	98932000	-	1

Talis C
Talis C 3-Hole Roman Tub Set Trim
Finishes : **rubbed bronze** Part no. : **14313921**

Description

Features
- Flow: 5.8 GPM
- 90° ceramic valves
- Solid brass

Required accessories
- Rough, 3-Hole Roman Tub Set (#06607USA)

Item details

List Price $ 810.00

Compliance

ADA UPC C ® MAP

Product image

Scale drawing

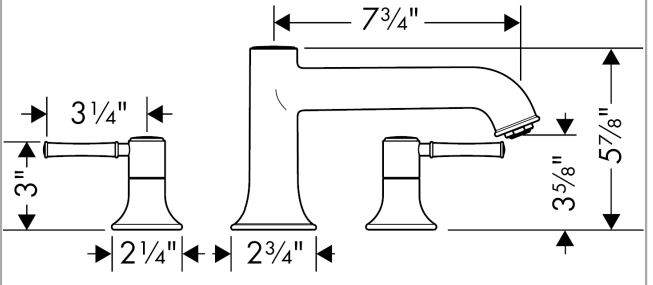

Talis C
Talis C 3-Hole Roman Tub Set Trim
Finishes : **rubbed bronze** Part no. : **14313921**

Exploded drawing

Year of production: **>09/09**

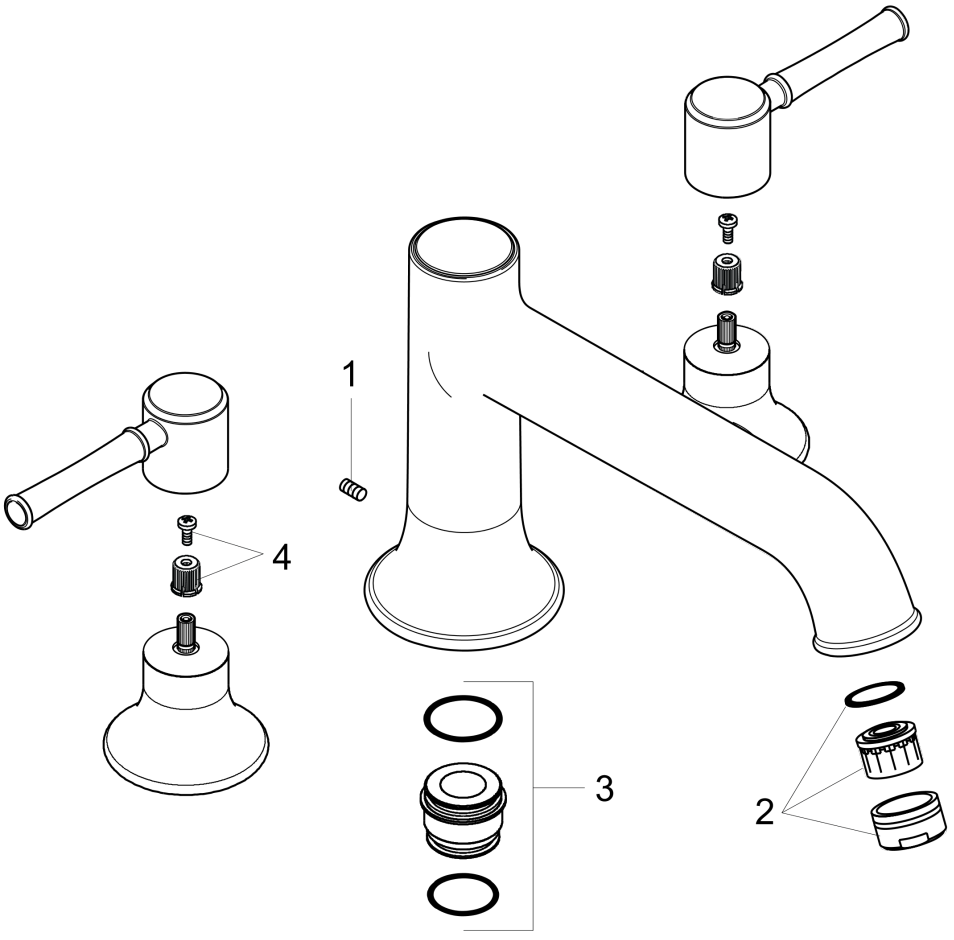

Talis C
Talis C 3-Hole Roman Tub Set Trim
Finishes : **rubbed bronze** Part no. : **14313921**

Spare parts list

Year of production: **>09/09**

Pos.	Description	Part no.	Price	PU
1	hollow set screw M6x6	97660000	-	1
2	aerator M24x1 (25 l/min)	13914920	-	1
3	adapter for spout	88512000	-	1
4	handle fixing set	98932000	-	1