# KS7761,2,5,8TXBS
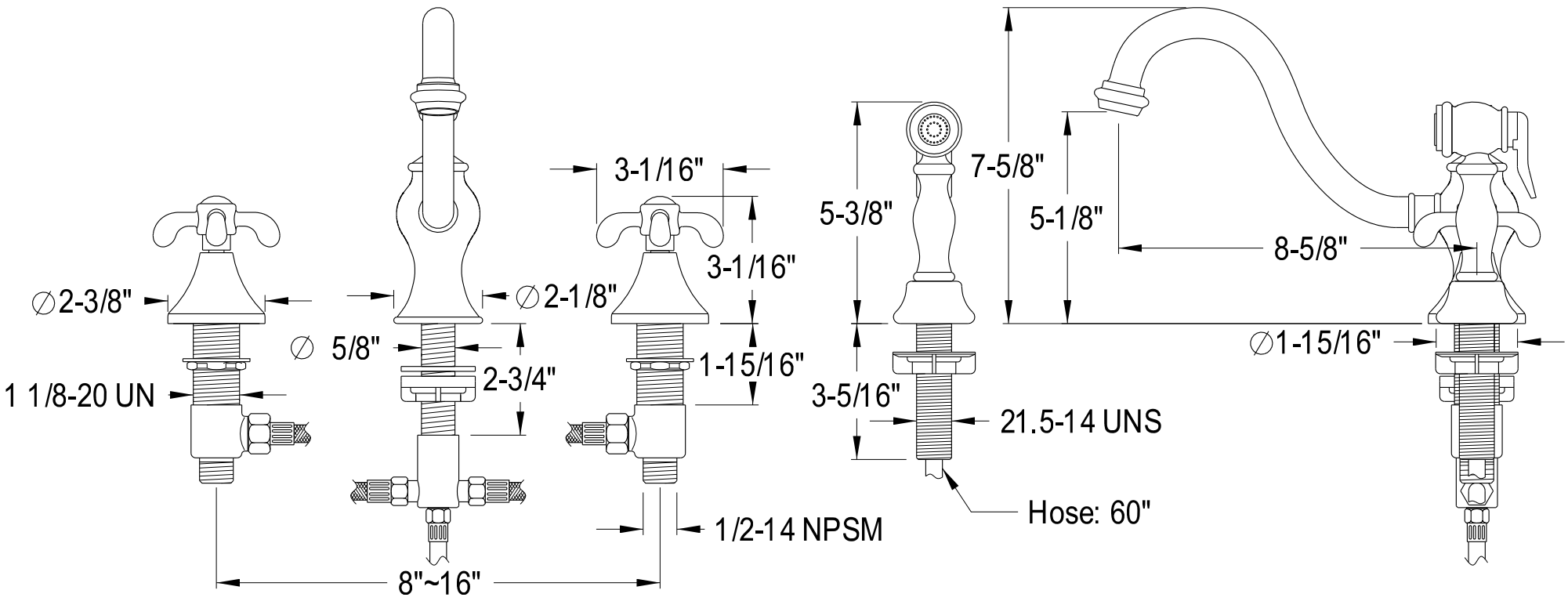
Widespread Kitchen Faucet With Brass Sprayer