MADE IN THE U.S.A.

JASON® HYDROTHERAPY

8328 MacArthur Dr. • North Little Rock, AR 72118
501.771.4477 • Fax: 501.771.2333
Customer Service: 800.255.5766
www.jasoninternational.com

Designer Collection Specifications
VE5535
Whirlpool & Soaking

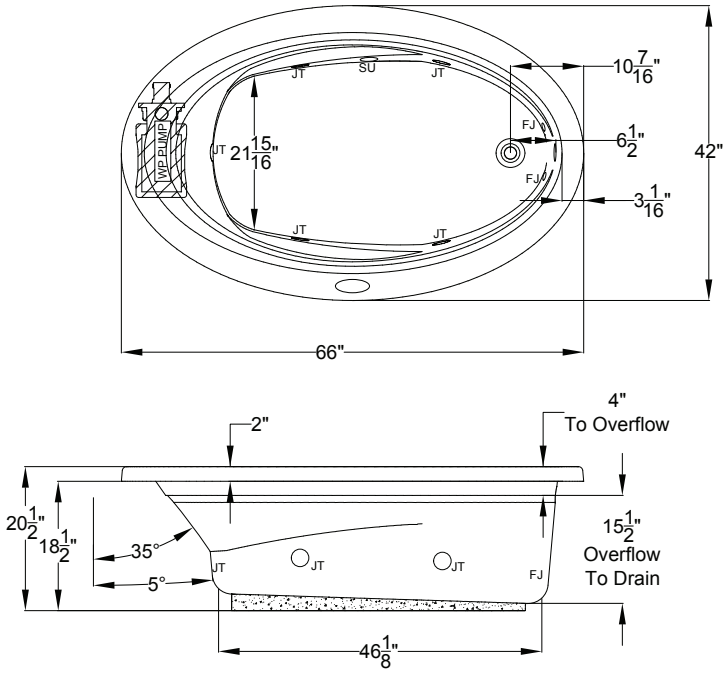

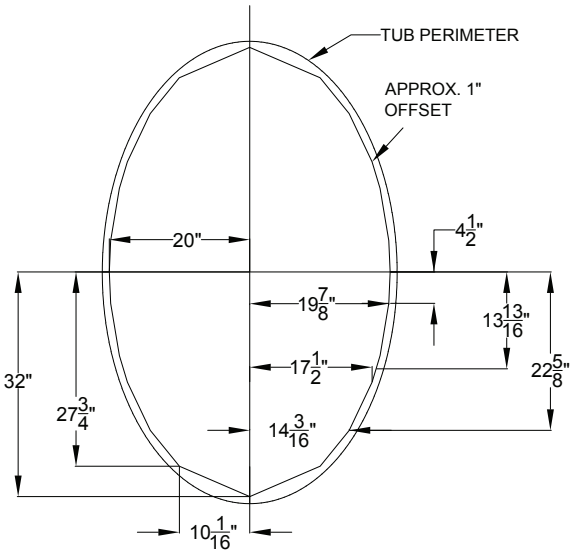

Patents recieved or pending.

Note: Dimensional Tolerances: ±1/4"

Drop-in-Hole Size:	See Diagram
Operating Capacity:	40 Gal.
Overflow Capacity:	70 Gal.
Floor Loading / sq.ft.:	42.1 / 39.7 lbs.
Carton Weight:	106 / 72 lbs.
Cube:	39.7 ft.^{3}

Note: The blower extends approximately 1" past the end radius of the bath. This requires angling the bath into the drop-in hole.

Construction: Fiberglass reinforced acrylic bath with Level Form™ full-support base.

We provide products listed with Intertek ETL SEMKO (Edison Testing Laboratories) U.S. and Canadian and with International Association of Plumbing and Mechanical Officials (IAPMO). Consult factory with your listing requirements.

Standard

A 120V system that includes a quiet 1-1/2 HP, 1-speed whirlpool pump; an electronic control; and a 20-minute timer.

Premier

A 120V system that includes a whisper quiet 1-1/2 HP, 1-speed combination whirlpool pump/heater; (2) Chromatherapy mood lights; Automatic Ozone System; an electronic control; and a 20-minute timer. The keypad also operates the LED Chromatherapy mood lights.

Signature

A 120V system that includes a whisper quiet 1-1/2 HP, 1-speed combination whirlpool pump/heater; (2) Chromatherapy mood lights; Automatic Ozone System; a digital control with LCD display window; low water level and water temperature sensors; and a 20-minute timer. Control keypad operates the pump, LED Chromatherapy mood lights, optional Jetted Neck Pillow and shows water temperature, pump status and time remaining. Includes Bluetooth Sound Immersion.

Copyright © 2018 Jason International. Designer Collection

MADE IN THE U.S.A.

JASON HYDROTHERAPY

8328 MacArthur Dr. • North Little Rock, AR 72118
501.771.4477 • Fax: 501.771.2333
Customer Service: 800.255.5766
www.jasoninternational.com

Designer Collection Specifications

VE5535

MicroSilk®

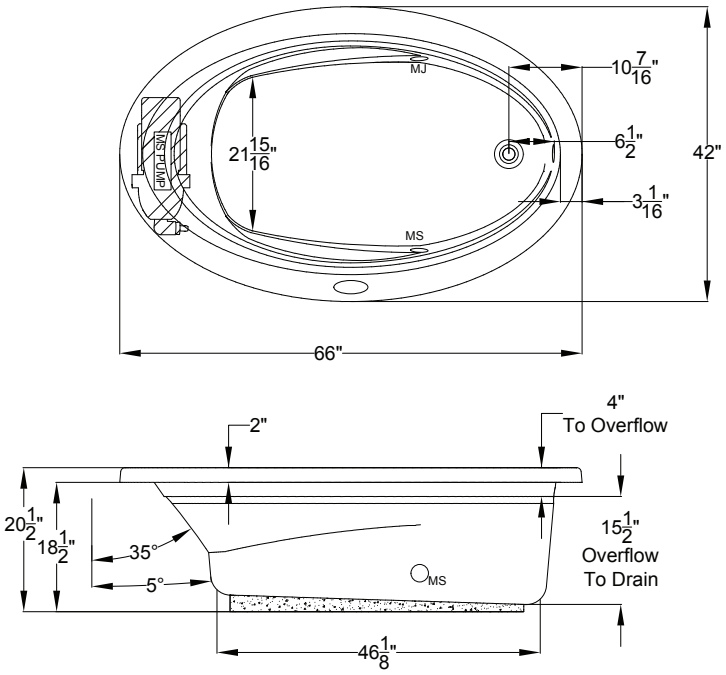

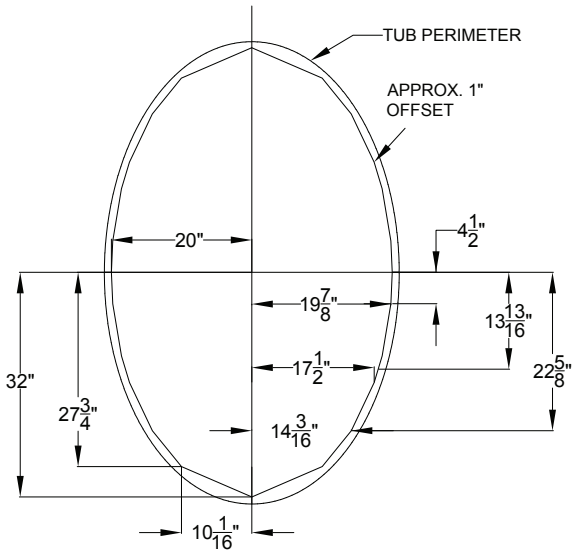

Patents received or pending.

Note: Dimensional Tolerances: ±1/4"

Drop-in-Hole Size:	See Diagram
Operating Capacity:	40 Gal.
Overflow Capacity:	70 Gal.
Floor Loading / sq.ft.:	41.9 lbs.
Carton Weight:	103 lbs.
Cube:	39.7 ft.^{3}

Construction: Fiberglass reinforced acrylic bath with Level Form™ full-support base.

We provide products listed with Intertek ETL SEMKO (Edison Testing Laboratories) U.S. and Canadian and with International Association of Plumbing and Mechanical Officials (IAPMO). Consult factory with your listing requirements.

Standard

A 120V system that includes a MicroSilk unit; an electronic control; and a 20-minute timer.

Premier

A 120V system that includes a MicroSilk unit; (2) Chromatherapy mood lights, Automatic Ozone System; an electronic control; and a 20-minute timer. The keypad also operates the LED Chromatherapy mood lights.

Signature

A120V system that includes a MicroSilk unit, (2) Chromatherapy mood lights; Automatic Ozone System; a digital control with LCD display window; low water and water temperature sensors; and a 20-minute timer. Control keypad operates the MicroSilk® unit, LED Chromatherapy mood lights and shows water temperature and time remaining. Includes Bluetooth Sound Immersion.

Copyright © 2018 Jason International. Designer Collection

MADE IN THE U.S.A.

JASON® HYDROTHERAPY

8328 MacArthur Dr. • North Little Rock, AR 72118
501.771.4477 • Fax: 501.771.2333
Customer Service: 800.255.5766
www.jasoninternational.com

Designer Collection Specifications

VE5535

AirMasseur®

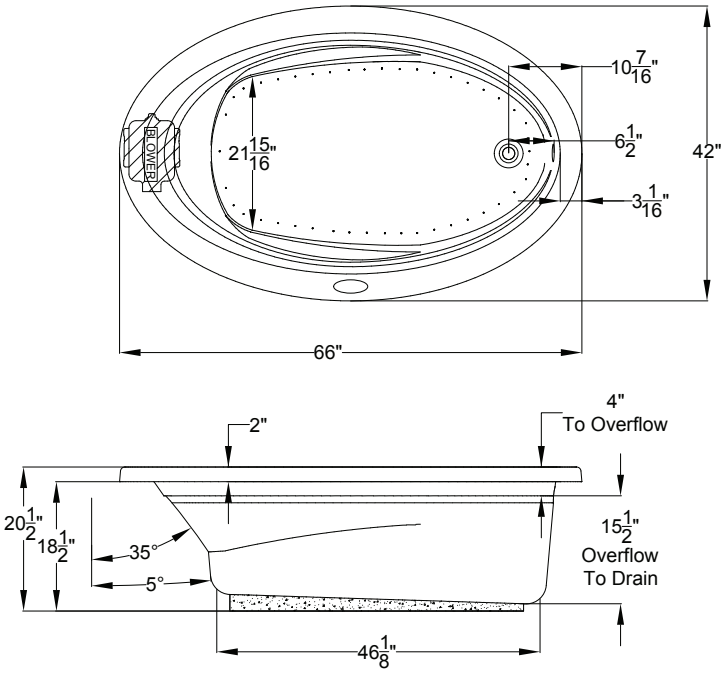

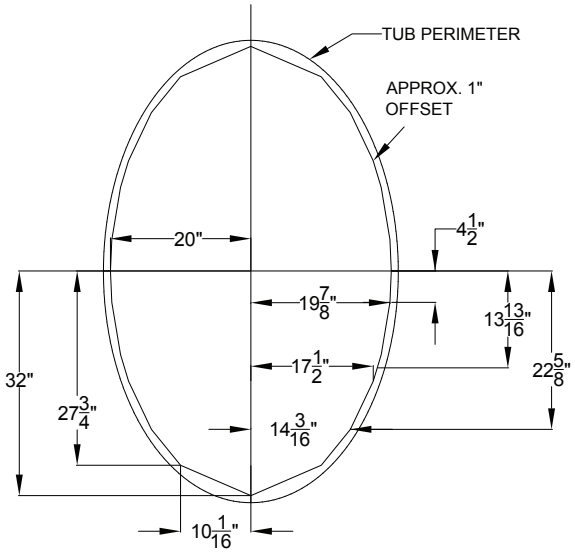

Patents recieved or pending.

Note: Dimensional Tolerances: ±1/4"

Drop-in-Hole Size:	See Diagram
Operating Capacity:	40 Gal.
Overflow Capacity:	70 Gal.
Floor Loading / sq.ft.:	42.6 lbs.
Carton Weight:	113 lbs.
Cube:	39.7 ft.^{3}

Construction: Fiberglass reinforced acrylic bath with Level Form™ full-support base.

We provide products listed with Intertek ETL SEMKO (Edison Testing Laboratories) U.S. and Canadian and with International Association of Plumbing and Mechanical Officials (IAPMO). Consult factory with your listing requirements.

Standard

A 120V system that includes a 1HP, variable speed air blower with integral air heater; automatic purge cycle; an electronic control that operates blower and blower speed for continuous, pulse or wave massage modes; and a 20-minute timer.

Premier

A 120V system that includes a 1HP, variable speed air blower with integral air heater; (2) Chromatherapy mood lights; Automatic Ozone System; an electronic control that operates blower and blower speed for continuous, pulse or wave massage modes; automatic purge cycle; and a 20-minute timer. The keypad also operates the LED Chromatherapy mood lights.

Signature

A 120V system that includes a 1HP, variable speed air blower with integral air heater; (2) Chromatherapy mood lights; Automatic Ozone System; a digital control with LCD display window; automatic purge cycle; and a 20-minute timer. Control keypad operates the blower and blower speed for continuous, pulse or wave massage modes, LED Chromatherapy mood lights and shows blower speed, water temperature and time remaining. Includes Bluetooth Sound Immersion.

Copyright © 2018 Jason International. Designer Collection

MADE IN THE U.S.A.

JASON HYDROTHERAPY
8328 MacArthur Dr. • North Little Rock, AR 72118
501.771.4477 • Fax: 501.771.2333
Customer Service: 800.255.5766
www.jasoninternational.com

Designer Collection Specifications
VE5535
MicroSilk®- AirMasseur®

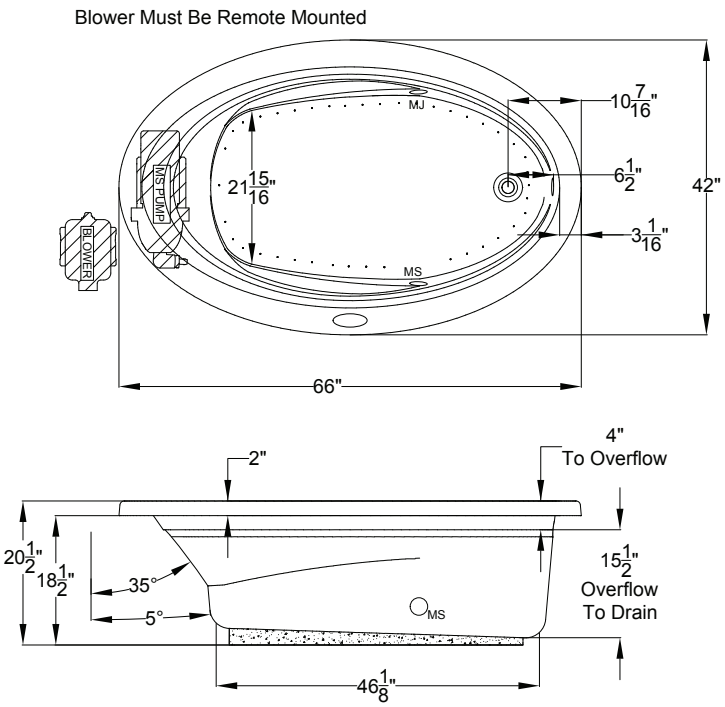

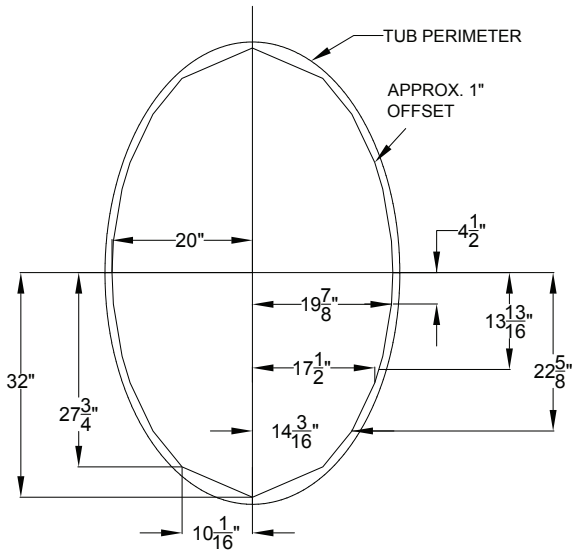

Patents recieved or pending.

Note: Dimensional Tolerances: ±1/4"

Drop-in-Hole Size:	See Diagram
Operating Capacity:	40 Gal.
Overflow Capacity:	70 Gal.
Floor Loading / sq.ft.:	45.4 lbs.
Carton Weight:	144 lbs.
Cube:	44.8 ft.^{3}

REMOTE MOUNTING THE BLOWER:
If an extension cord is required use a minimum 16 AWG cord with a maximum of 20ft length

Construction: Fiberglass reinforced acrylic bath with Level Form™ full-support base.

We provide products listed with Intertek ETL SEMKO (Edison Testing Laboratories) U.S. and Canadian and with International Association of Plumbing and Mechanical Officials (IAPMO). Consult factory with your listing requirements.

Standard

A 120V system that includes a MicroSilk® unit; a 1HP, variable speed air blower with integral air heater; automatic purge cycle; an electronic control; and a 20-minute timer. Control keypad operates the MicroSilk® unit, blower and blower speed for continuous, pulse or wave massage modes.

Premier

A 120V system that includes a MicroSilk® unit; a 1HP, variable speed air blower with integral air heater, (2) Chromatherapy mood lights, Automatic Ozone System; automatic purge cycle; an electronic control; and a 20-minute timer. Control keypad operates the MicroSilk® Unit, blower and blower speed for continuous, pulse or wave massage modes. The keypad also operates the LED Chromatherapy mood lights.

Signature

A 120V system that includes a MicroSilk® unit; a 1HP, variable speed air blower with integral air heater, (2) Chromatherapy lights, Automatic Ozone System; automatic purge cycle; a digital control with LCD display window; low water level and water temperature sensors to ensure proper operation; and a 20-minute timer. Control keypad operates the MicroSilk® unit, blower and blower speed for continuous, pulse or wave massage modes, LED Chromatherapy lights and shows MicroSilk® status, blower speed, water temperature and time remaining. Includes Bluetooth Sound Immersion.

Copyright © 2019 Jason International. Designer Collection

MADE IN THE U.S.A.

JASON HYDROTHERAPY

8328 MacArthur Dr. • North Little Rock, AR 72118
501.771.4477 • Fax: 501.771.2333
Customer Service: 800.255.5766
www.jasoninternational.com

Designer Collection Specifications

VE5535

MicroSilk®- Whirlpool

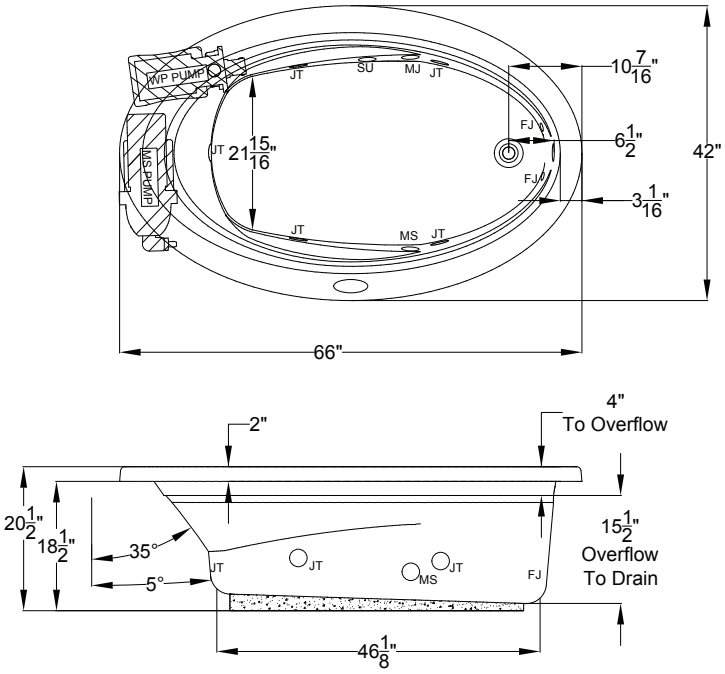

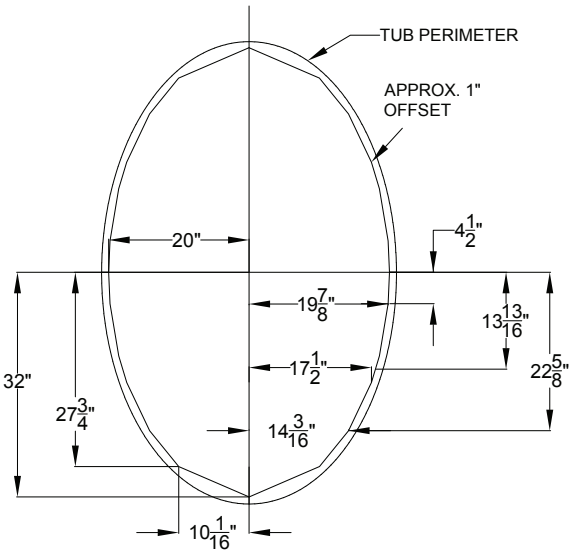

Note: Equipment may extend beyond the outside perimeter of the bath.
Consult factory for details.

Patents recieved or pending.

Note: Dimensional Tolerances: ±1/4"

Drop-in-Hole Size:	See Diagram
Operating Capacity:	40 Gal.
Overflow Capacity:	70 Gal.
Floor Loading / sq.ft.:	44.3 lbs.
Carton Weight:	137 lbs.
Cube:	39.7 ft.^{3}

Construction: Fiberglass reinforced acrylic bath with Level Form™ full-support base.

We provide products listed with Intertek ETL SEMKO (Edison Testing Laboratories) U.S. and Canadian and with International Association of Plumbing and Mechanical Officials (IAPMO). Consult factory with your listing requirements.

Standard

A 120V system that includes a MicroSilk® unit; a quiet 1-1/2 HP, 1-speed whirlpool pump; an electronic control; and a 20-minute timer.

Premier

A 120V system that includes a MicroSilk® unit; a whisper quiet 1-1/2 HP, 1-speed combination whirlpool pump/heater, (2) Chromatherapy Mood Lights, Automatic Ozone System; an electronic control; and a 20-minute timer. The keypad also operates the LED Chromatherapy mood lights.

Signature

A 120V system that includes a MicroSilk® unit; a whisper quiet 1-1/2 HP, 1-speed combination whirlpool pump/heater, (2) Chromatherapy Mood Lights; Automatic Ozone System; a digital control with LCD display window; low water level and water temperature sensors to ensure proper operation; and a 20-minute timer. Control keypad operates the pumps, LED Chromatherapy mood lights, and shows water temperature, pump status and time remaining. Includes Bluetooth Sound Immersion.

Copyright © 2018 Jason International. Designer Collection

MADE IN THE U.S.A.

JASON HYDROTHERAPY

8328 MacArthur Dr. • North Little Rock, AR 72118
501.771.4477 • Fax: 501.771.2333
Customer Service: 800.255.5766
www.jasoninternational.com

Designer Collection Specifications

VE5535

Air-Whirlpool

Blower Must Be Remote Mounted

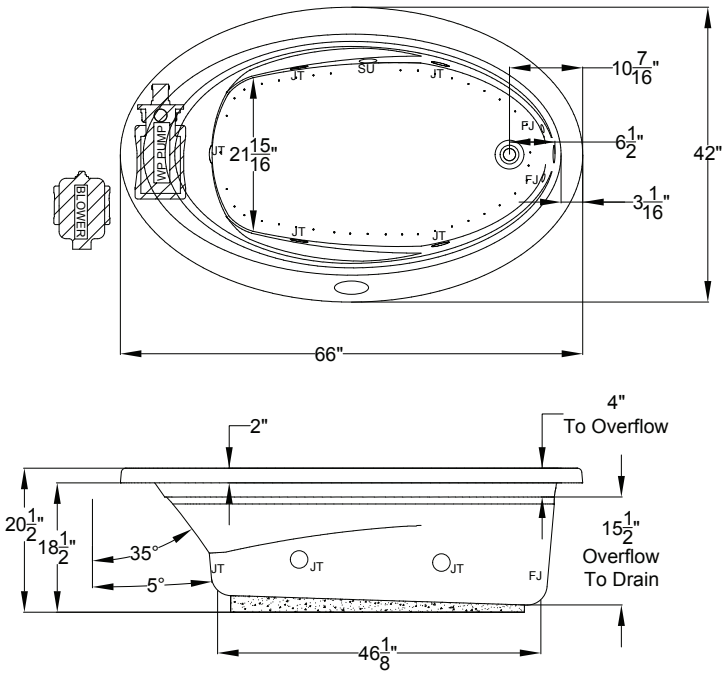

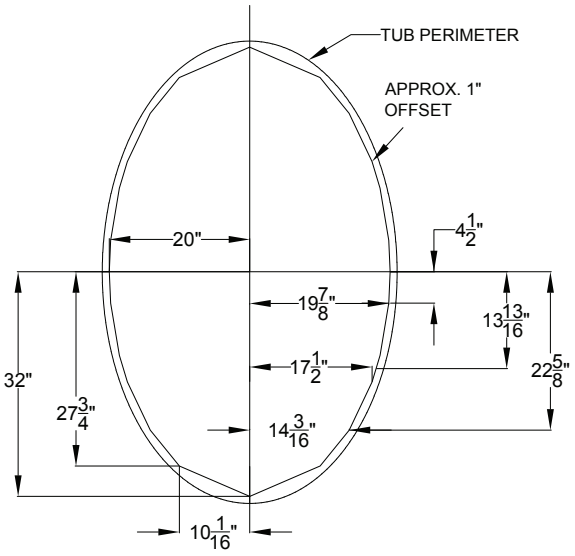

Patents recieved or pending.

Note: Dimensional Tolerances: ±1/4"

Drop-in-Hole Size:	See Diagram
Operating Capacity:	40 Gal.
Overflow Capacity:	70 Gal.
Floor Loading / sq.ft.:	46.7 lbs.
Carton Weight:	171 lbs.
Cube:	39.7 ft.^{3}

REMOTE MOUNTING THE BLOWER:
If an extension cord is required use a minimum 16 AWG cord with a maximum of 20ft length

Construction: Fiberglass reinforced acrylic bath with Level Form™ full-support base.

We provide products listed with Intertek ETL SEMKO (Edison Testing Laboratories) U.S. and Canadian and with International Association of Plumbing and Mechanical Officials (IAPMO). Consult factory with your listing requirements.

Standard

A 120V system that includes a quiet 1-1/2 HP, 1-speed whirlpool pump; a 1HP, variable speed air blower with integral air heater; automatic purge cycle; an electronic control; and a 20-minute timer. Control keypad operates the pump, blower and blower speed for continuous, pulse or wave massage modes.

Premier

A 120V system that includes a whisper quiet 1-1/2 HP, 1-speed combination whirlpool pump/heater; a 1HP, variable speed air blower with integral air heater; (2) Chromatherapy Mood Lights; Automatic Ozone System; automatic purge cycle; an electronic control; and a 20-minute timer. Control keypad operates the pump, blower and blower speed for continuous, pulse or wave massage modes. The keypad also operates the LED Chromatherapy mood lights.

Signature

A 120V system that includes a whisper quiet 1-1/2 HP, 1-speed combination whirlpool pump/heater; a 1HP, variable speed air blower with integral air heater; (2) Chromatherapy mood lights; Automatic Ozone System; automatic purge cycle; a digital control with LCD display window; low water level and water temperature sensors to ensure proper operation; and a 20-minute timer. Control keypad operates the pump, blower and blower speed for continuous, pulse or wave massage modes, LED Chromatherapy mood lights, optional jetted neck pillow and shows pump status, blower speed, water temperature and time remaining. Includes Bluetooth Sound Immersion.

Copyright © 2019 Jason International. Designer Collection