Clubmaster 3-Jet Handshower
Finishes : **chrome** Part no. : **28525001**

Description

Features

- 72 no-clog spray channels
- Spray modes: Full, Soft spray, Pulsating Massage
- Flow: 2.5 GPM

Item details

List Price	$ 220.00

Technology

Quick Clean

Compliance

UPC C ®

Product image

Scale drawing

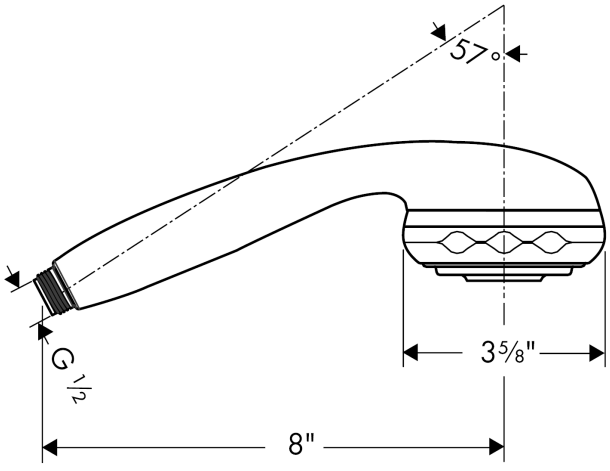

Clubmaster 3-Jet Handshower
Finishes : **brushed nickel** Part no. : **28525821**

Description

Features

- 72 no-clog spray channels
- Spray modes: Full, Soft spray, Pulsating Massage
- Flow: 2.5 GPM

Item details

List Price	$ 320.00

Technology

Quick Clean

Compliance

UPC C ®

Product image

Scale drawing

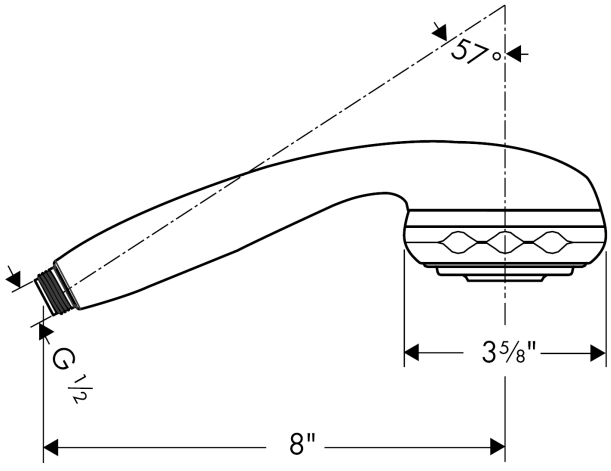

Clubmaster 3-Jet Handshower
Finishes : **polished nickel** Part no. : **28525831**

Description

Features

- 72 no-clog spray channels
- Spray modes: Full, Soft spray, Pulsating Massage
- Flow: 2.5 GPM

Item details

List Price	$ 290.00

Technology

Quick Clean

Compliance

UPC C ®

Product image
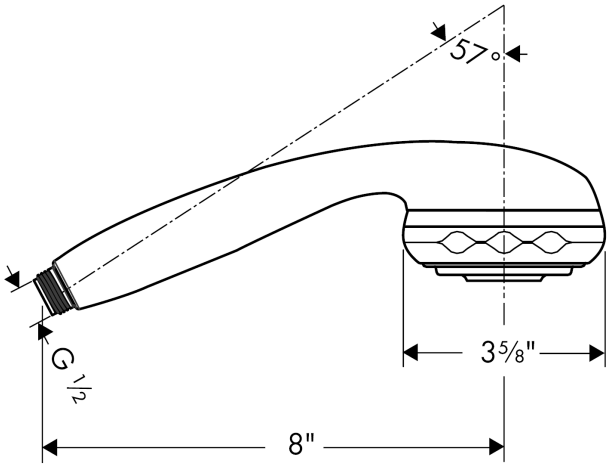
Scale drawing