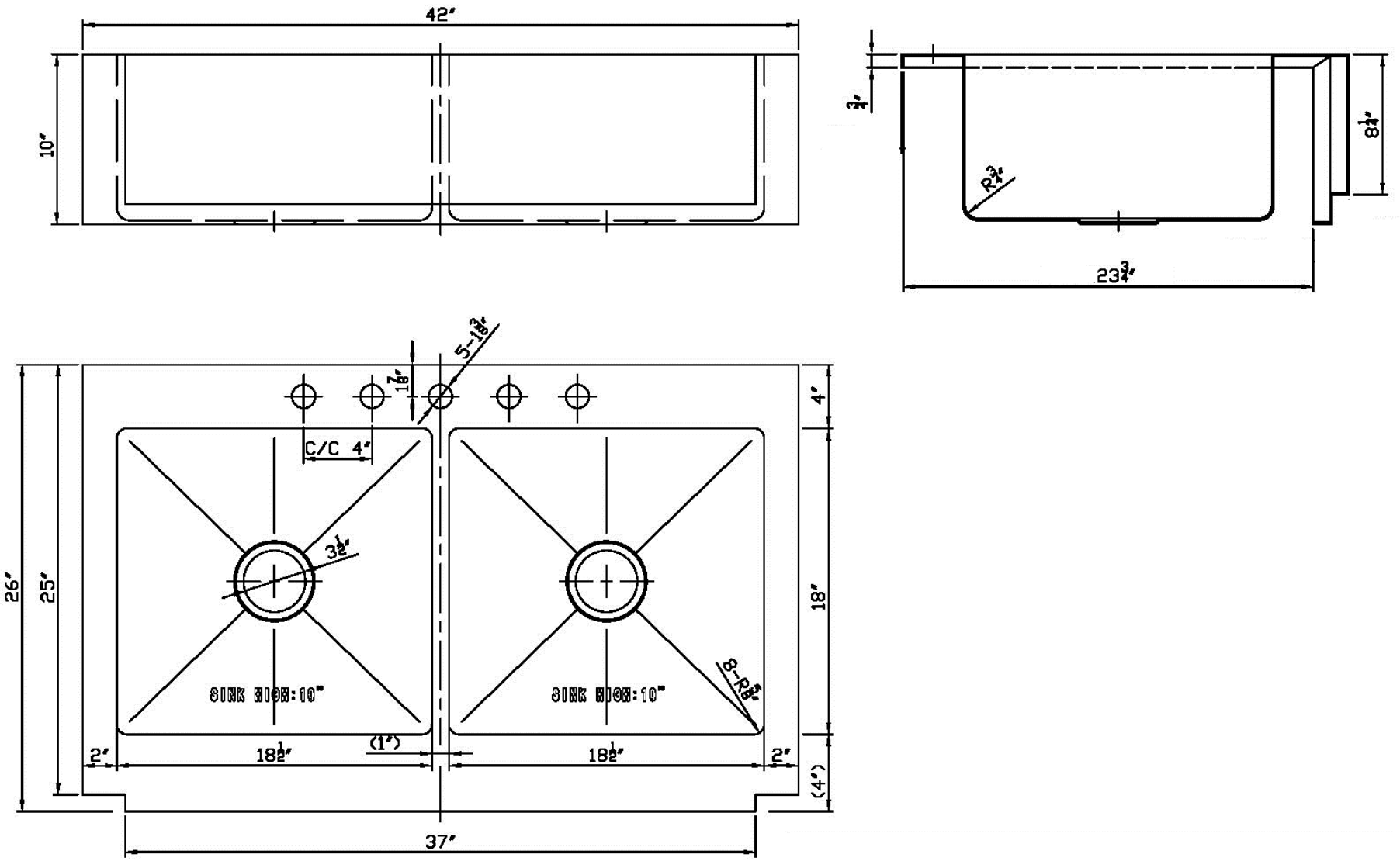
42"
10"
3/4"
8 1/4"
R 3/4"
23 3/4"
5-1 3/8"
1 7/8"
C/C 4"
4"
26"
25"
3 1/2"
18"
SINK HIGH: 10"
SINK HIGH: 10"
8-R 5/8"
2"
18 1/2"
(1")
18 1/2"
2"
(4")
37"