CORNER MODELS ABSL66

TOP VIEW

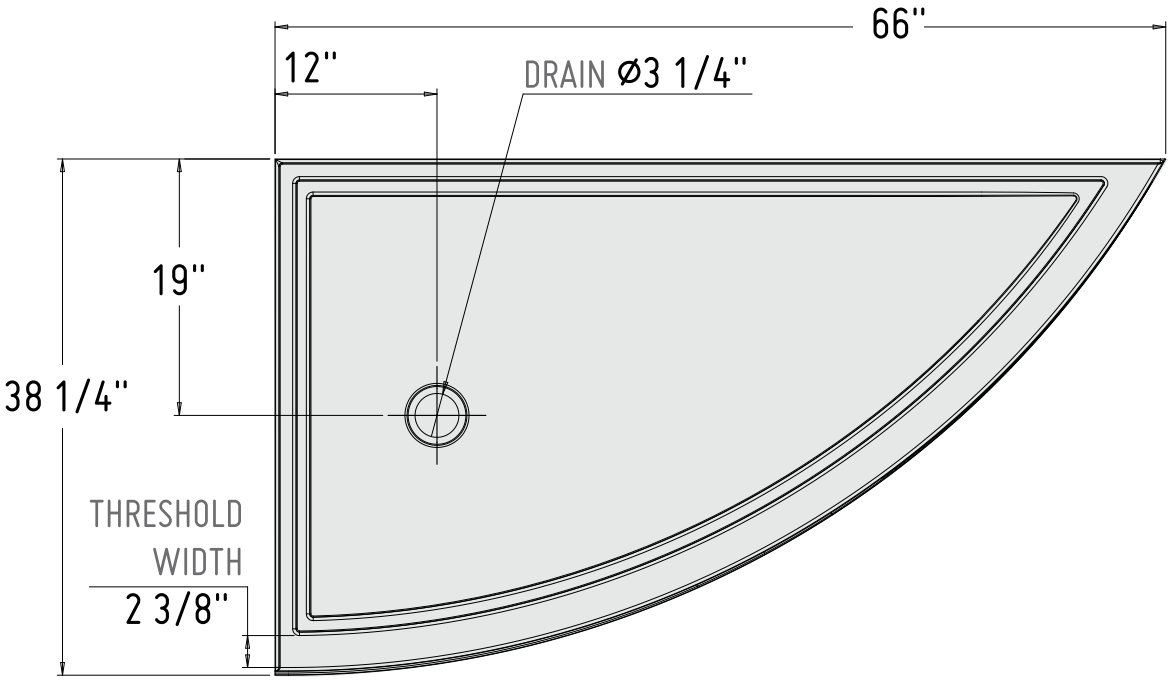

FRONT VIEW

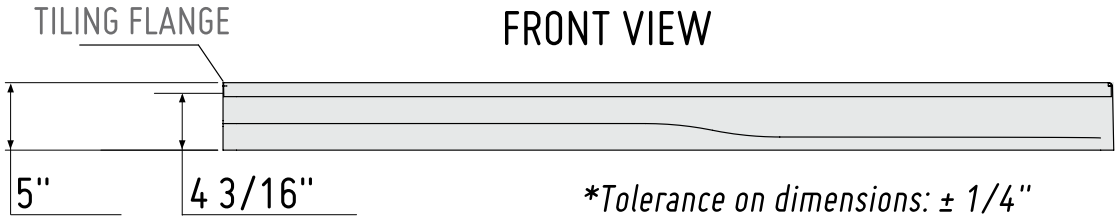

**Tolerance on dimensions: ± 1/4"*

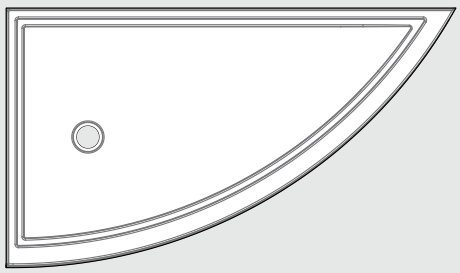

ABSL66-18L

Left-side base

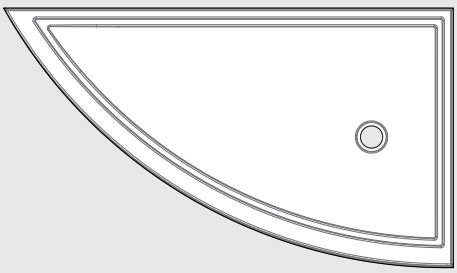

ABSL66-18R

Right-side base