ELKAY®
SPECIFICATIONS

Elkay Stainless Steel 25" x 23" x 8" Single Bowl Floor Mount Service Sink Package
Model(s) EFS2523C

PRODUCT SPECIFICATIONS

Elkay Stainless Steel 25" x 23" x 8" Single Bowl, Floor Mount Service Sink Package. Sink is manufactured from 304 Stainless Steel with a Buffed Satin finish, Center drain placement, and Bottom only pads.

Material:	304 Stainless Steel
Finish:	Buffed Satin
Sound Deadening:	Bottom only pads
Number of Bowls:	1
Sink Dimensions:	25" x 23" x 8"
Bowl 1 Dimensions:	20-1/16" x 17-15/16" x 8"
Drain Size:	4-9/16" (116mm)
Drain Location:	Center

Included with Product: **EFS2523 sink, one LK43 drain**

AMERICAN PRIDE. A LIFETIME TRADITION.
Like your family, the Elkay family has values and traditions that endure. For almost a century, Elkay has been a family-owned and operated company, providing thousands of jobs that support our families and communities.

Product Compliance: ASME A112.19.3/CSA B45.4
Buy American Act
Accessory: ASME A112.18.2/CSA B125.2

Clean and Care Manual (PDF)
Installation Instructions (PDF)
Warranty (PDF)

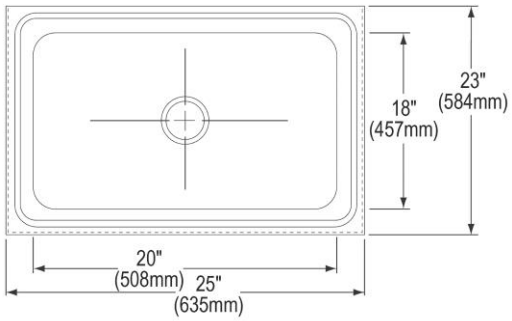

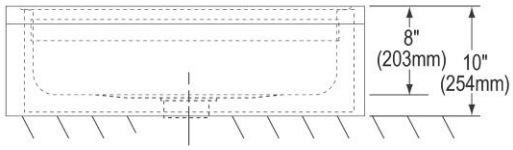

PART:_____QTY: _____
PROJECT:_____
CONTACT:_____
DATE:_____
NOTES:_____
APPROVAL:_____

In keeping with our policy of continuing product improvement, Elkay reserves the right to change product specifications without notice. Please visit elkay.com for the most current version of Elkay product specification sheets. This specification describes an Elkay product with design, quality, and functional benefits to the user. When making a comparison of other producers' offerings, be certain these features are not overlooked.

ELKAY®
SPECIFICATIONS

Elkay Drain Fitting 5-1/2" Stainless Steel Dome / Flat Grid Strainer
Model(s) LK43

PRODUCT SPECIFICATIONS

Elkay Drain Fitting 5-1/2" Stainless Steel Dome / Flat Grid Strainer. Overall dimensions are 5-5/16" x 5-5/16" x 3-1/4". Made of Chrome-plated Brass.

Material:	Chrome-plated Brass
Finish:	Chrome (CR)
Dimensions:	5-5/16" x 5-5/16" x 3-1/4"
Shipping Weight:	2 lbs.

- Chrome plated brass body drain outlet fitting for 4-15/16" (125mm) opening.
- Field adjustable stainless steel flat grid strainer or dome strainer with 5-5/16"(135mm) O.D. top diameter.
- 3-5/8"(92mm) I.D. x 4"(102mm) O.D. tailpiece.
- Designed to attach to 3"(76mm) I.P.S. pipe utilizing caulk or epoxy.

Chrome (CR)

AMERICAN PRIDE. A LIFETIME TRADITION.
Like your family, the Elkay family has values and traditions that endure. For almost a century, Elkay has been a family-owned and operated company, providing thousands of jobs that support our families and communities.

Product Compliance: ASME A112.18.2/CSA B125.2
Buy American Act

Clean and Care Manual (PDF)
Warranty (PDF)

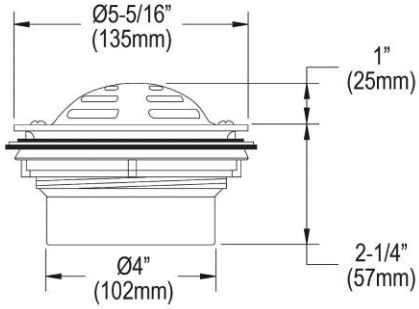

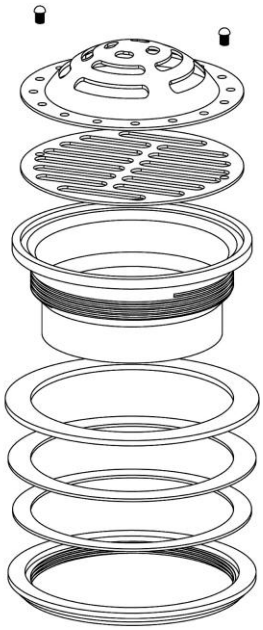

PART:_____QTY: _____

PROJECT:_____

CONTACT:_____

DATE:_____

NOTES:_____

APPROVAL:

In keeping with our policy of continuing product improvement, Elkay reserves the right to change product specifications without notice. Please visit elkay.com for the most current version of Elkay product specification sheets. This specification describes an Elkay product with design, quality, and functional benefits to the user. When making a comparison of other producers' offerings, be certain these features are not overlooked.