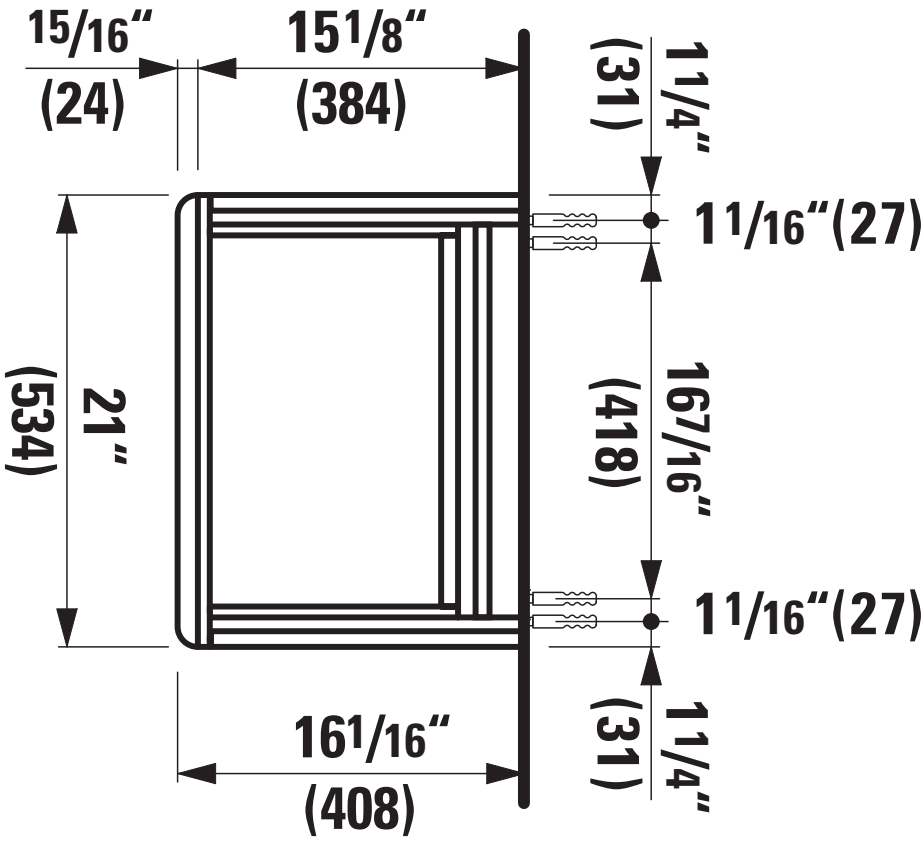
15/16"
(24)
15 1/8"
(384)
1 1/4"
(31)
1 1/16"(27)
21"
(534)
16 7/16"
(418)
1 1/16"(27)
16 1/16"
(408)
1 1/4"
(31)

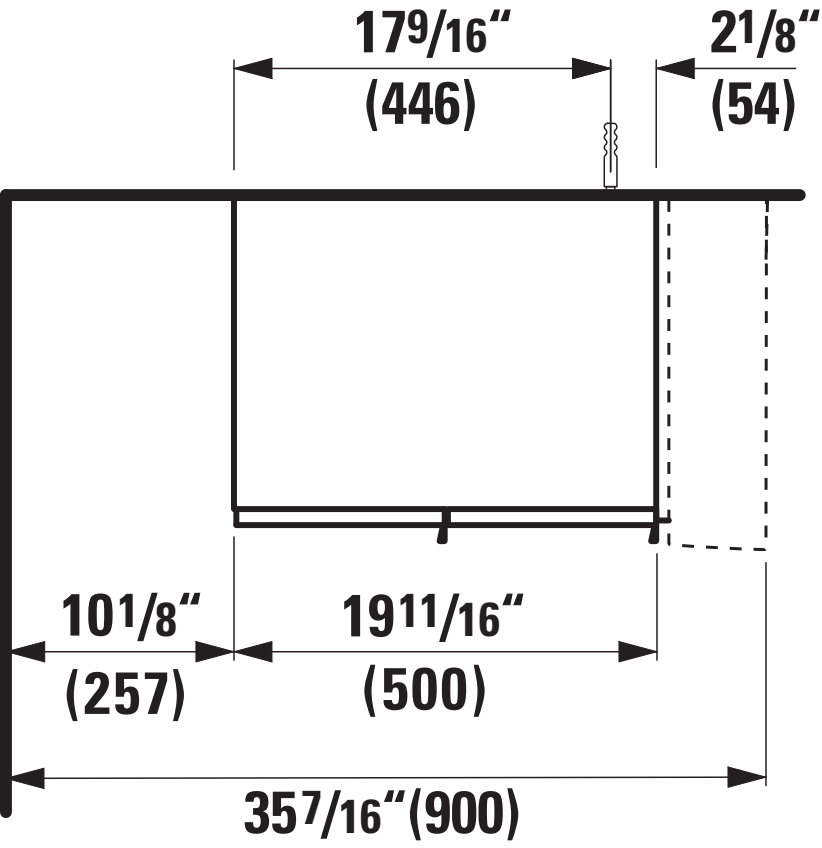
17 9/16"
(446)
2 1/8"
(54)
10 1/8"
(257)
19 11/16"
(500)
35 7/16"(900)