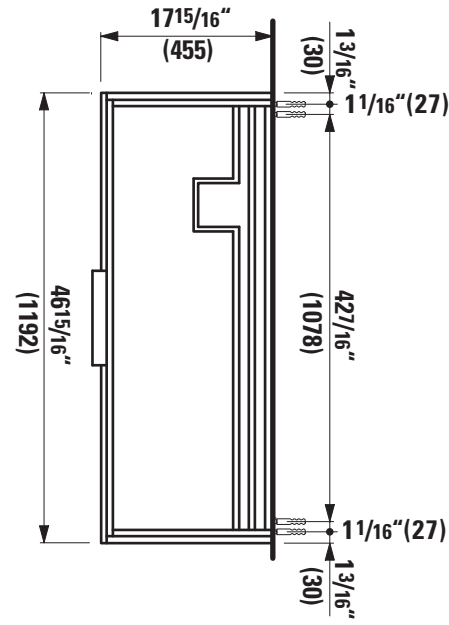
17 15/16"
(455)
1 3/16"
(30)
1 1/16"(27)
46 15/16"
(1192)
42 7/16"
(1078)
1 1/16"(27)
1 3/16"
(30)

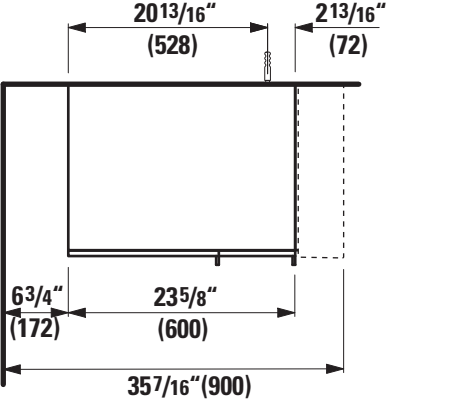
20 13/16"
(528)
2 13/16"
(72)
6 3/4"
(172)
23 5/8"
(600)
35 7/16"(900)