SHOWER

Luna Thermostatic Shower Set w/Handshower (Rough & Trim)

GF2.020A-LM40S

Information

- Thermostatic Showerhead Flow Rate 2.1 gpm @ 60 psi
- Handshower Flow Rate 1.5 gpm @ 60 psi
- Contemporary Square Showerhead and Handshower Flow Rate 4.2 gpm @ 60 psi

SHOWER
Rough
G-8005

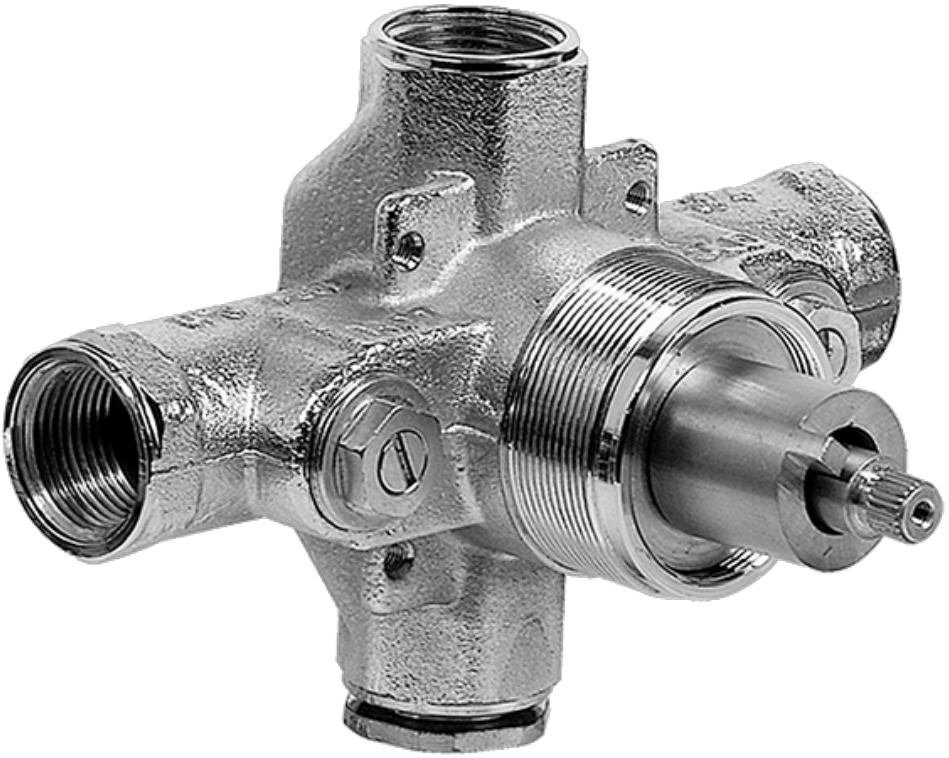

Information

- 18.4 gpm @ 60 psi
- 3/4" universal inlets/outlets with female threads
- Built-in service stops
- Complete serviceability from front of all units
- Supplied with protective plastic cover
- Thermostatic valve uses a paraffin wax cartridge

Finishes

Polished Chrome

Steelnox® (Satin Nickel)

SHOWER

Immersion SOLID Trim Plate w/Handle

G-8041-LM40S-T

Information

- Single metal handle
- Decorative trim plate
- Use with G-8000 or G-8005 thermostatic rough valve
- To complete package, you must order rough valve
- ADA

Finishes

Polished Chrome

Steelnox® (Satin Nickel)

G-8041

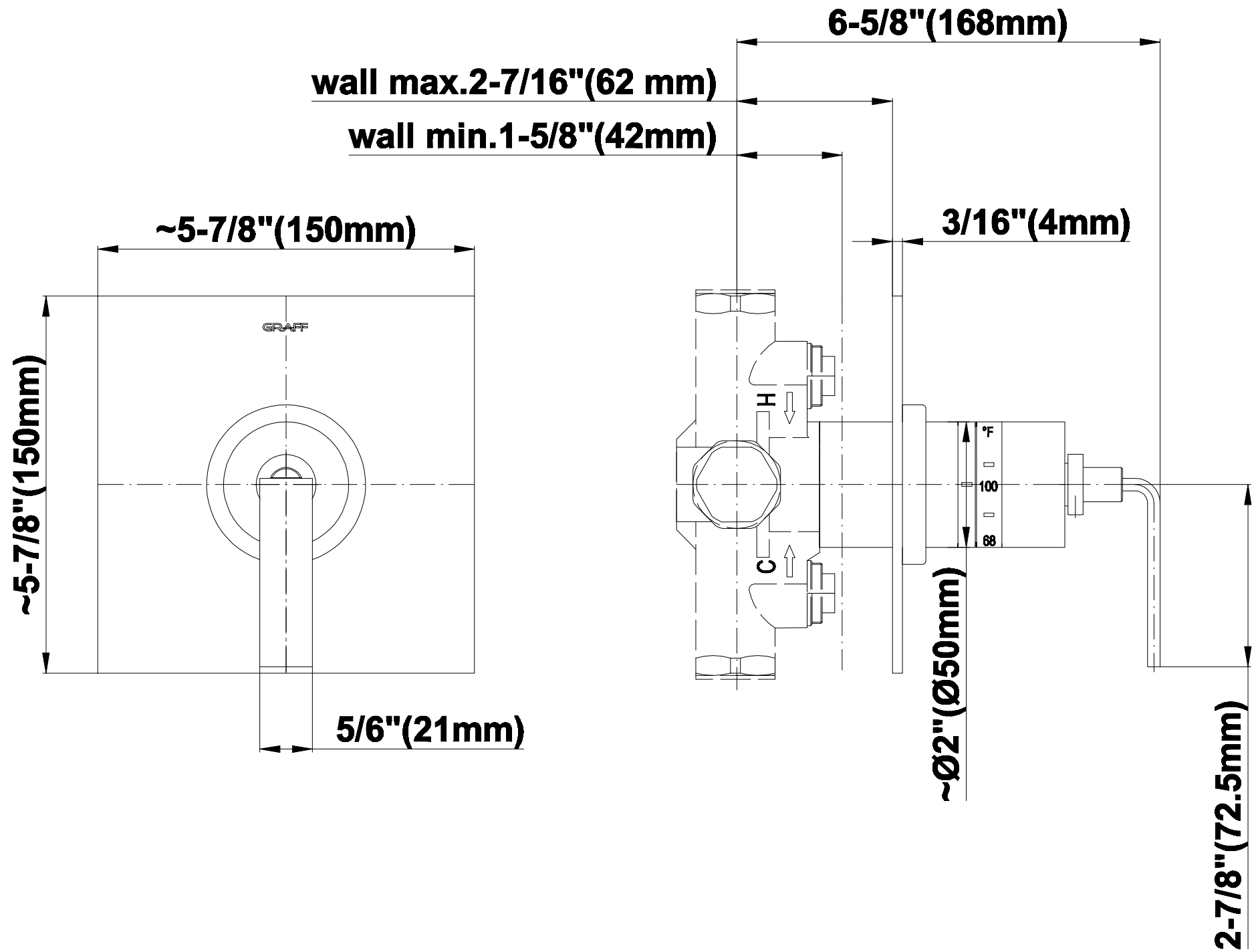

GRAFF®

CUTTING EDGE DESIGN

SHOWER
Rough
G-8075

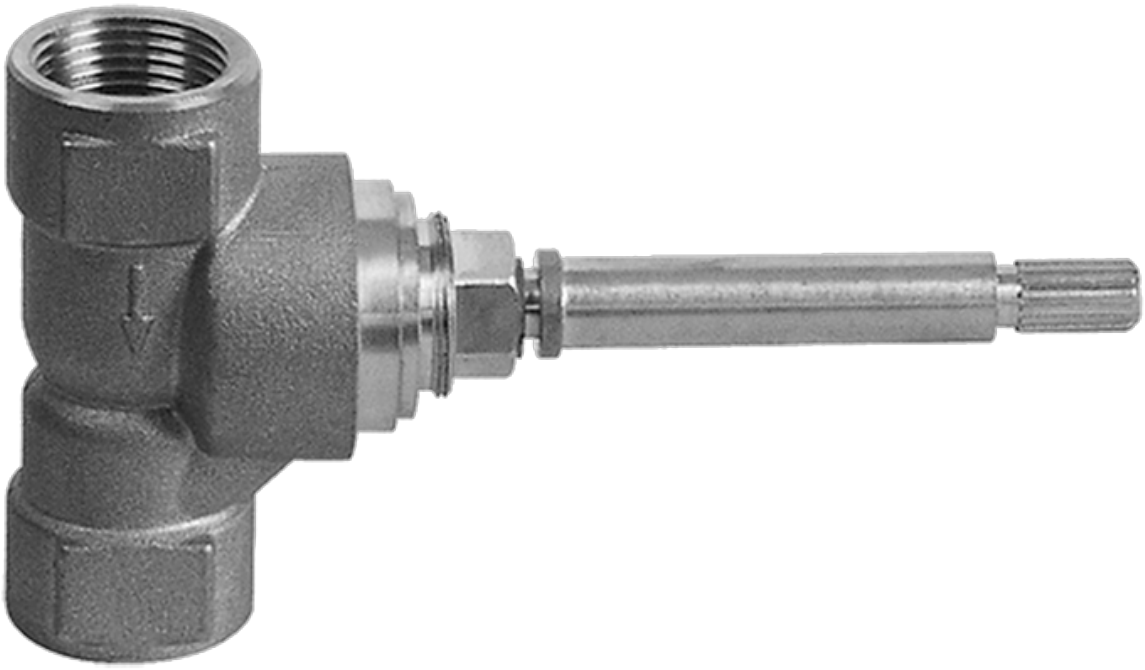

Information

- 3/4" universal inlets/outlets with female threads
- Supplied with protective plastic cover

Finishes

Polished Chrome

Steelnox® (Satin Nickel)

SHOWER

Immersion SOLID Trim Plate w/Handle

G-8095-LM40S-T

Information

- Single metal handle
- Decorative trim plate
- Use with G-8070 or G-8075 thermostatic stop/volume control rough valve
- To complete package, you must order rough valve
- ADA

Finishes

Polished Chrome

Steelnox® (Satin Nickel)

G-8095

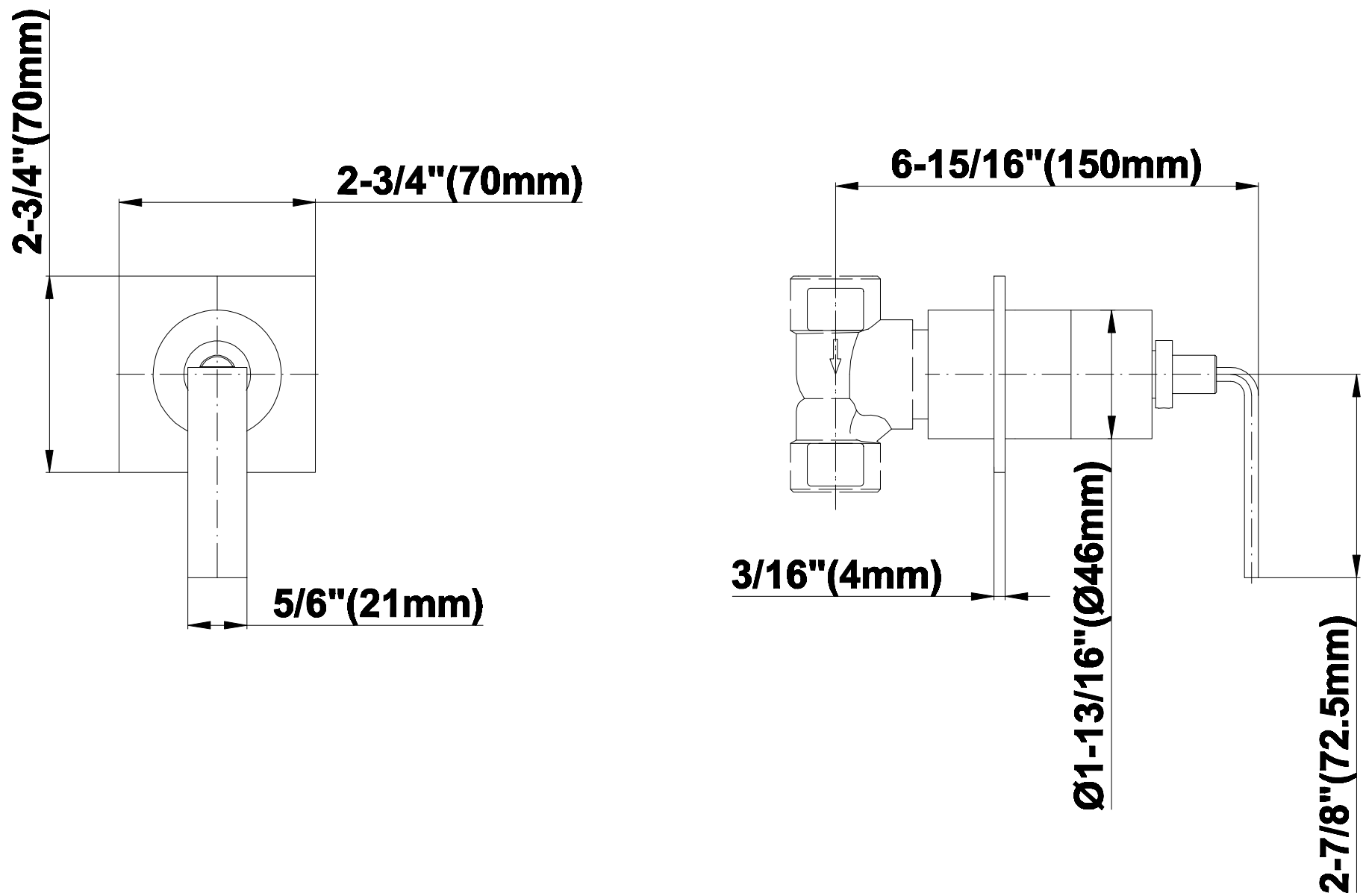

GRAFF®
CUTTING EDGE DESIGN

SHOWER

59" Shower Hose

G-8605

Information

- Brass spiral flexible hose with conical nut

Finishes

Polished Chrome

Steelnox® (Satin Nickel)

G-8605
Shower Components
59” Shower Hose

Product Features

- Brass spiral fexible hose with conical nut

Warranty

- Limited lifetime warranty

For complete warranty information go to www.graff-designs.com/en-nam/warranty

Available Finishes

- Polished Chrome
  G-8605-PC
- Polished Nickel
  G-8605-PN
- Brushed Nickel
  G-8605-BNi
- Unfinished Brushed Brass*
  G-8605-UBB*
- Unfinished Brass*
  G-8605-UB*
- Matte Black*
  G-8605-MBK*
- Architectural Black*
  G-8605-BK*
- Architectural White*
  G-8605-WT*
- Olive Brass*
  G-8605-OB*
- Gunmetal*
  G-8605-GM*
- Vintage Brushed Brass*
  G-8605-VBB*
- Steelnox (Satin Nickel)
  G-8605-SN
- 24K Brushed Gold*
  G-8605-BAU*
- 24K Gold*
  G-8605-AU*
- Gunmetal Distressed*
  G-8605-GMD*

* Special order finish- call for availability

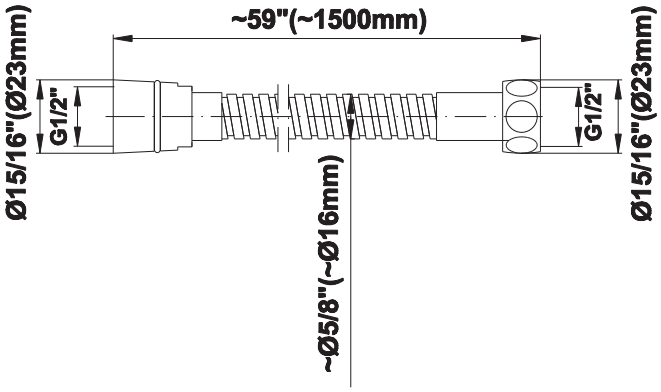

The measurements shown are for reference only. Products and specifications shown are subject to change without notice. Revised 7/2019
www.graff-designs.com | phone: 800-954-4723

SHOWER

Contemporary Square Wall Bracket for Handshower

G-8632

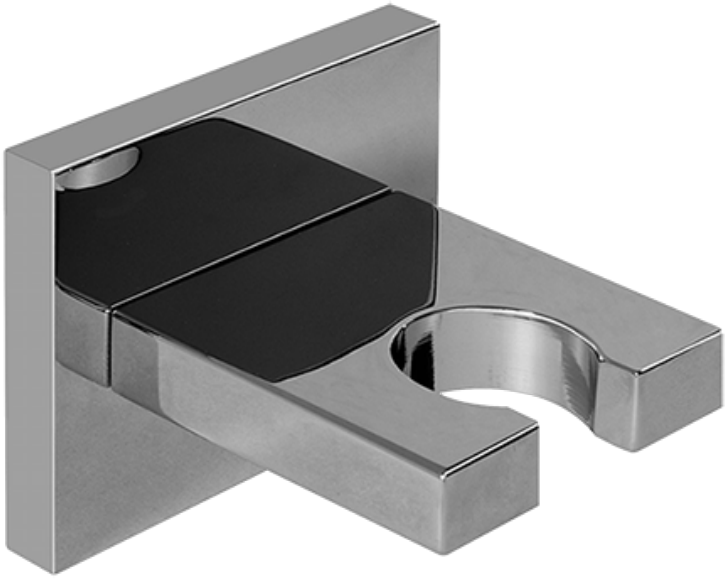

Information

- Solid brass construction

Finishes

Polished Chrome

Steelnox® (Satin Nickel)

G-8632

Contemporary Square Wall Bracket for Handshower

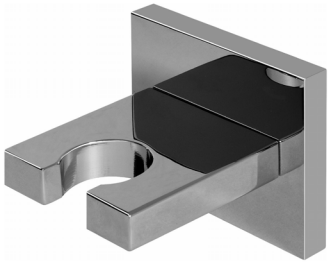

Product Features

- Solid brass construction

Available Finishes

- Polished Chrome
  G-8632-PC
- Steelnox®
  G-8632-SN

Warranty

- Limited lifetime warranty

For complete warranty information go to
http://www.graff-faucets.com/en/info/faqs

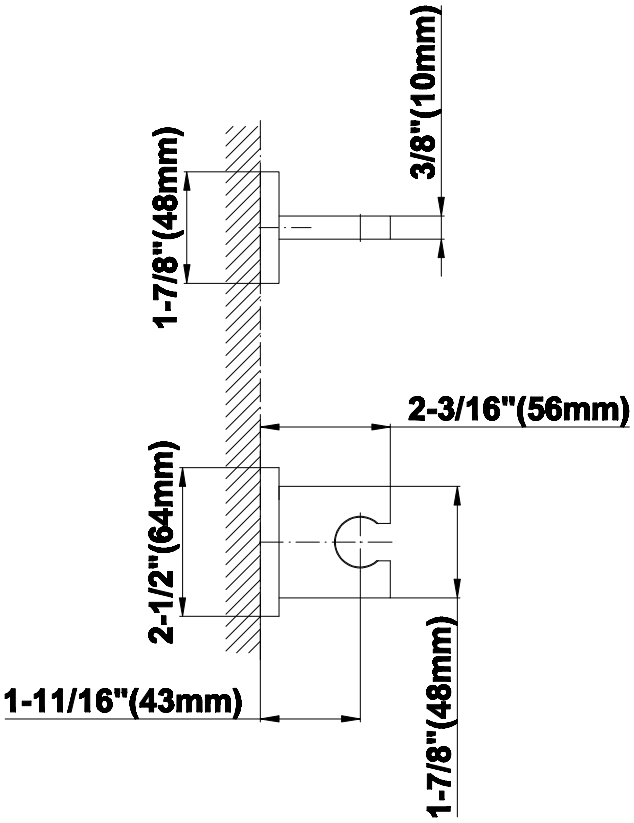

The measurements shown are for reference only. Products and specifications shown are subject to change without notice. Revised 02/2017.

www.graff-faucets.com | phone: 800-954-4723

SHOWER

Contemporary Square Wall Supply Elbow

G-8633

Information

- 1/2" NPT female thread inlet

Finishes

Polished Chrome

Steelnox® (Satin Nickel)

G-8633

Contemporary Square Wall Supply Elbow

Product Features

- 1/2" NPT female thread inlet

Available Finishes

- Polished Chrome
  G-8633-PC
- Steelnox®
  G-8633-SN
- Architectural Black w/Chrome Accents
  G-8633-PC/BK

Warranty

- Limited lifetime warranty

For complete warranty information go to http://www.graff-faucets.com/en/info/faqs

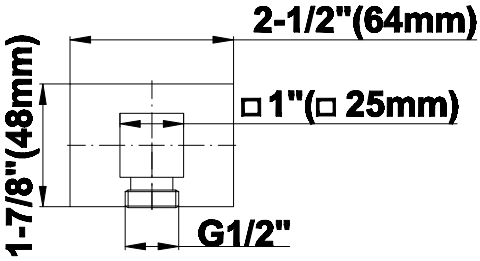

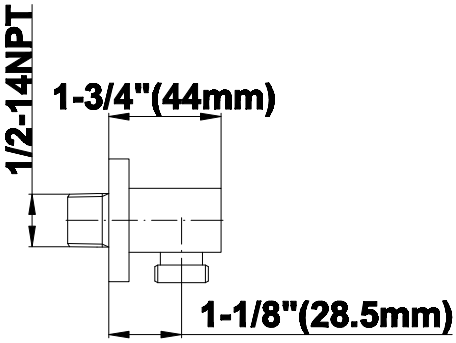

The measurements shown are for reference only. Products and specifications shown are subject to change without notice. Revised 02/2017.

www.graff-faucets.com | phone: 800-954-4723

SHOWER

Contemporary Rectangle Handshower

G-8654

Information

- Smooth, all-metal handle
- Shower hose not included
- Handshower flow rate ≤1.5 max gpm
- Includes internal backflow preventer
- CALGreen

Finishes

Polished Chrome

Steelnox® (Satin Nickel)

G-8654

Shower Components

Contemporary Rectangle Handshower

Product Features

- Smooth, all-metal handle
- Shower hose not included
- Includes internal backflow preventer
- Handshower flow rate ≤ 1.5 max gpm

Warranty

- Limited lifetime warranty

For complete warranty information go to https://www.graff-designs.com/en/info/faqs

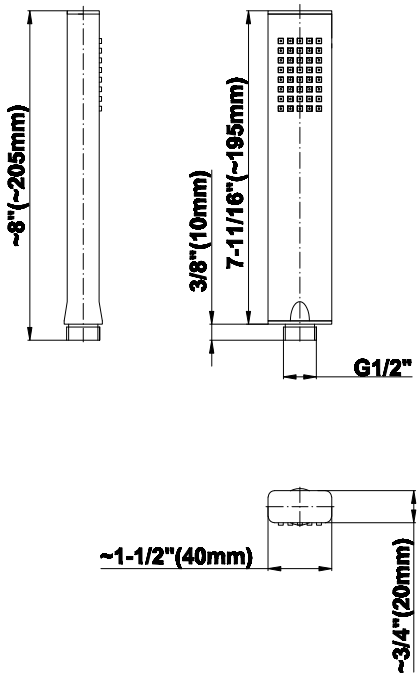

Available Finishes

- Polished Chrome
  G-8654-PC
- Polished Nickel
  G-8654-PN
- Brushed Nickel
  G-8654-BNi
- Matte Black*
  G-8654-MBK*
- Architectural Black*
  G-8654-BK*
- Architectural White*
  G-8654-WT*
- Steelnox (Satin Nickel)
  G-8654-SN
- Olive Bronze*
  G-8654-OB*
- Gunmetal*
  G-8654-GM*
- OR'osa PVD*
  G-8654-RG*
- Brushed OR'osa PVD*
  G-8654-BRG*
- Onyx PVD*
  G-8654-OX*
- Brushed Onyx PVD*
  G-8654-BOX*
- 24K Brushed Gold*
  G-8654-BAU*
- 24K Gold*
  G-8654-AU*

* Special order finish- call for availability

SHOWER

Spout and Wall Bracket

G-8700-T

Finishes

Polished Chrome

Steelnox® (Satin Nickel)

G-8700
LUNA Series

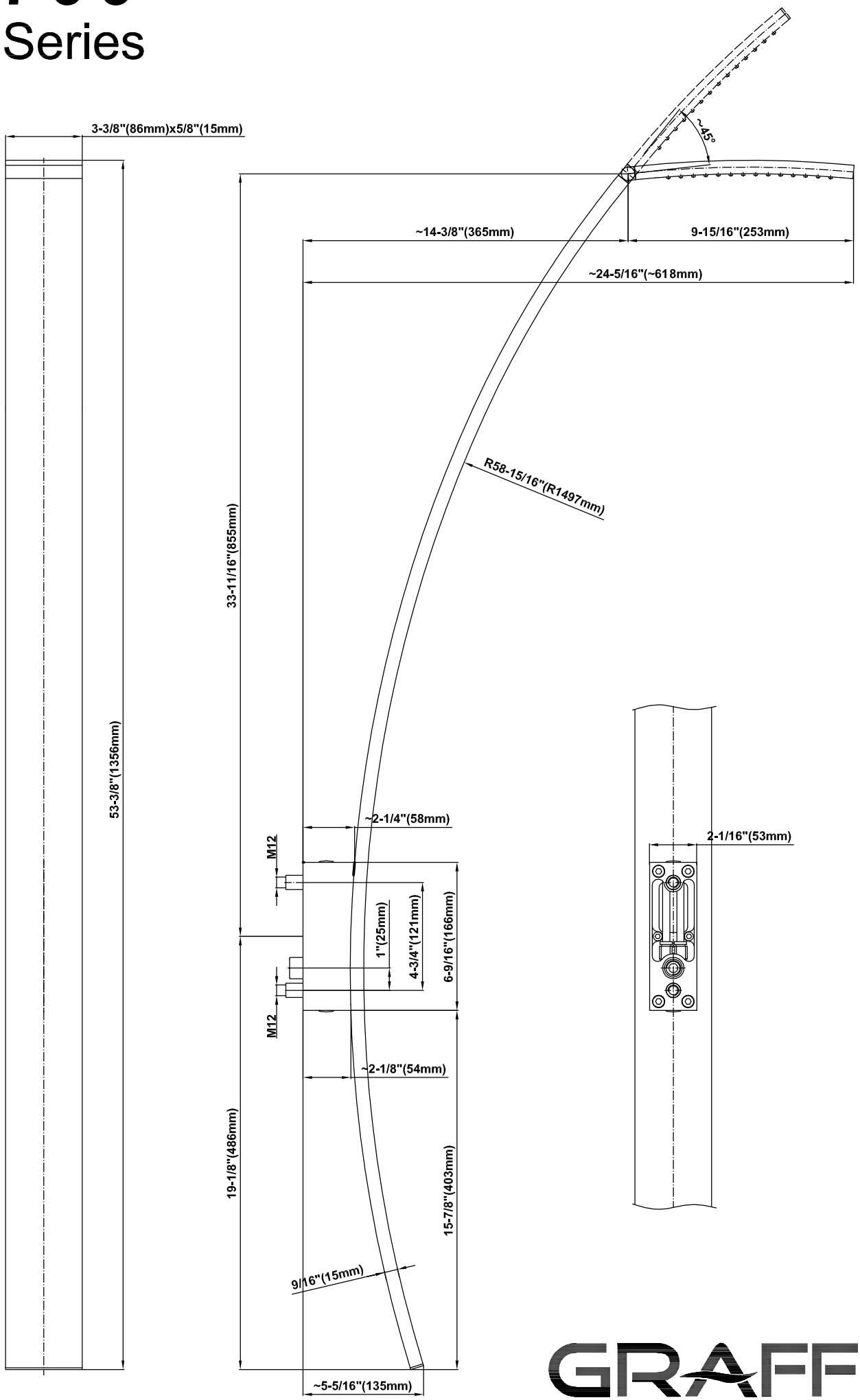

GRAFF®
CUTTING EDGE DESIGN

SHOWER
Rough
G-8705

Finishes

Polished Chrome

Steelnox® (Satin Nickel)

G-8705

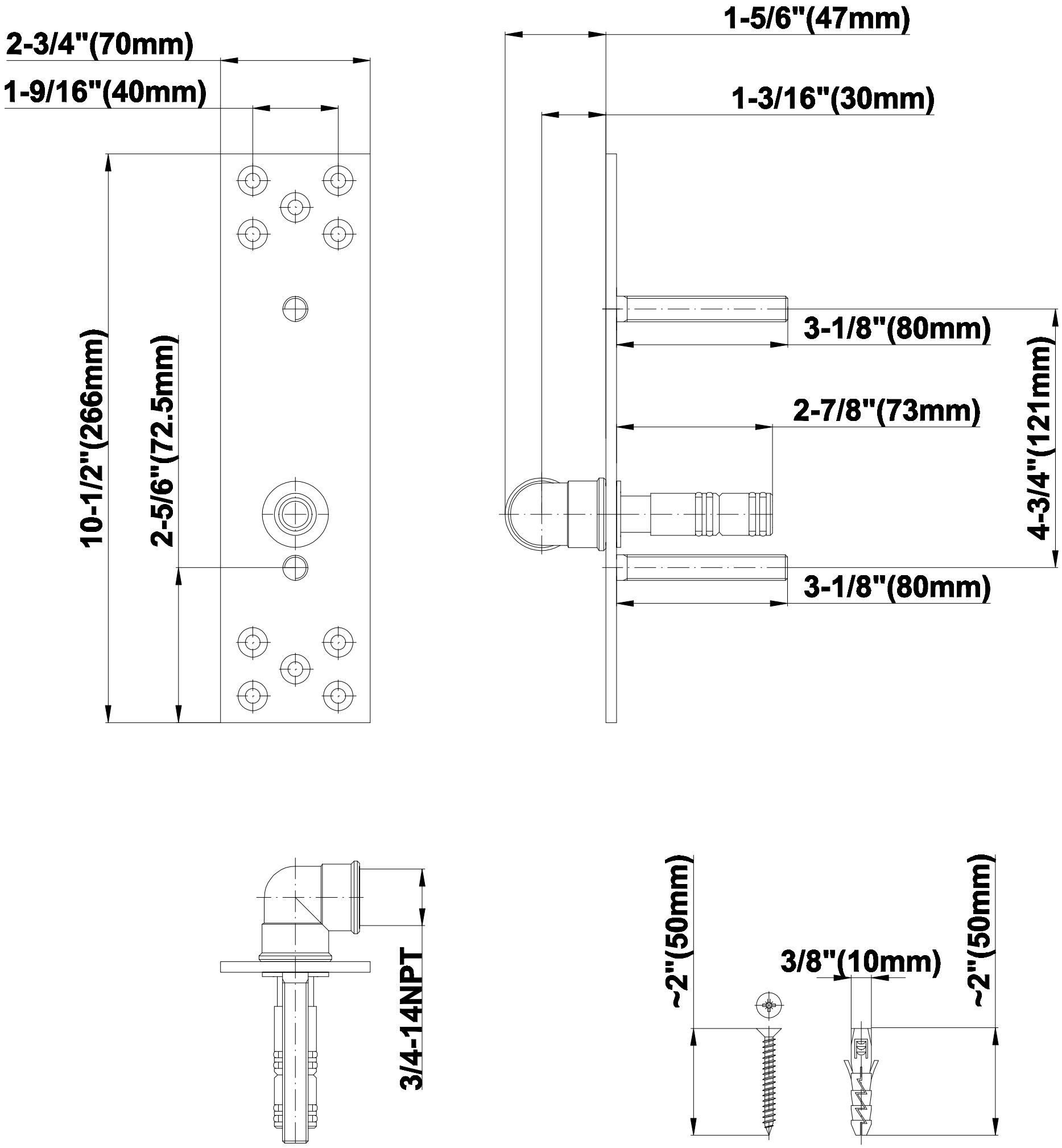

GRAFF®

CUTTING EDGE DESIGN