WH81214

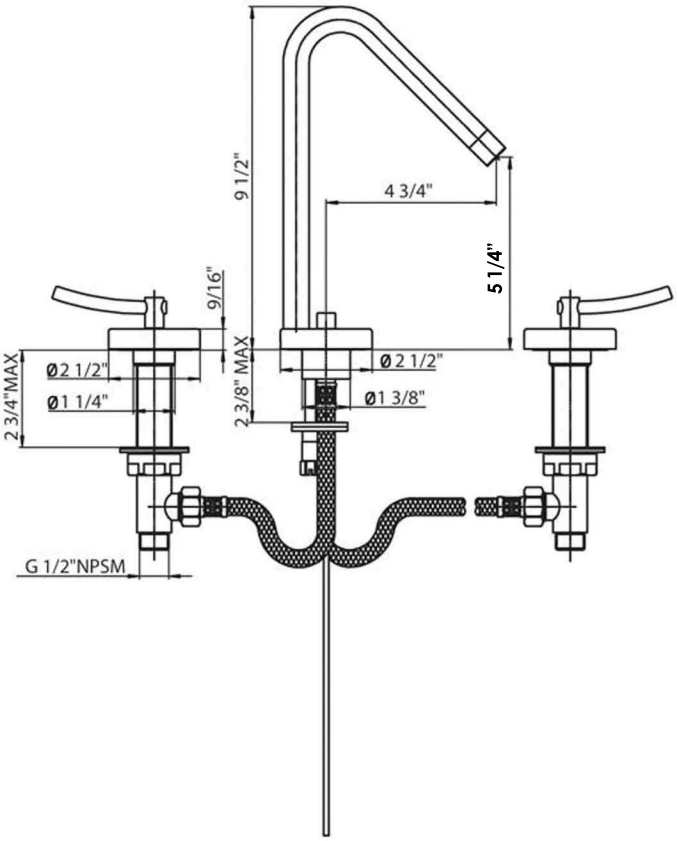

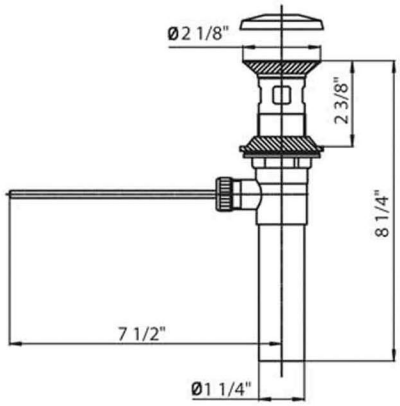

LIVE WITH STYLE!

P.O. Box 26064, West Haven, CT USA 06516 • [P]: 203.479.8466 • [F]: 203.479.8477
[Toll Free Phone]: 800.527.6690 • [Toll Free Fax]: 800.694.4837 • info@WhitehausCollection.com