PSSSB2054
WIRE GRID

Cat. No.

PSSSB2054-WIRE

BARCLAY

Features:

►Fits bottom of PSSSB2054 prep sink
►Rubber Feet Covers Included

Finishes:

SS Stainless Steel

W: 12-¾”
D: 17-⅝”
H: 1”

Drain Hole : 4-¾”

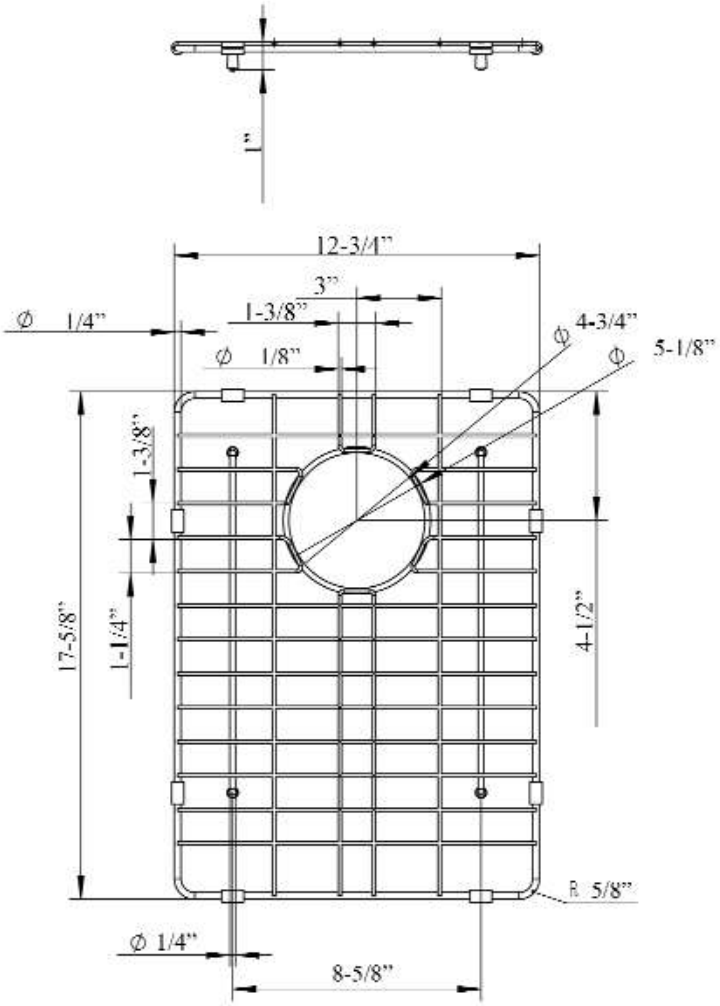

WARNING: This product can expose you to chemicals, including chromium, which is known to the state of California to cause cancer and birth defects or other reproductive harm.
For more information go to www.P65Warnings.ca.gov

Dimensions and specifications subject to change without notice.