CRAFTMADE

Cavalier - CAV52AN5LK

52" Ceiling Fan with Blades and Light Kit

Finish: Antique Nickel

Elegant design and impeccable craftsmanship makes this an extraordinary ceiling fan. with a subtle nod to medieval art and metalwork, intricately shaped fan blades and the soft glow of its central candelabrum enclosed in clear hammered glass, Cavalier brings a touch of warmth and sophistication both indoors and out.

- Standard, 3-Speed Reversible Motor
- 10" Downrod (Included)
- 52" Blades in Walnut (Included)
- Integrated Light Kit (3-40W Candelabra Bulbs Included)
- ICS Remote & Wall Controls (Included)
- Dual Mount (Flat or Angled Ceiling)
- Suitable for Damp Locations
- Remote Dimming

Specs

Blade Sweep Opt (in.)	52
Blades	5
Blade Pitch (deg)	14
Motor Size (MM)	172x20
Amps at High Speed	0.61
Watts (Hi Speed)	71.47
High Speed (CFM)	5512.95
Low Speed (CFM)	2045.40
Carton Size (CU FT)	3.13
Bulb Wattage	40
Light Kit Options	Integrated Light Kit

PDFCROWD.COM

Dimensions

A:	26.50
B:	16.50
C:	13.39
D:	5.91
E:	6.73
F: w/o Light Kit -	6.73
Downrod Length (in.)	10

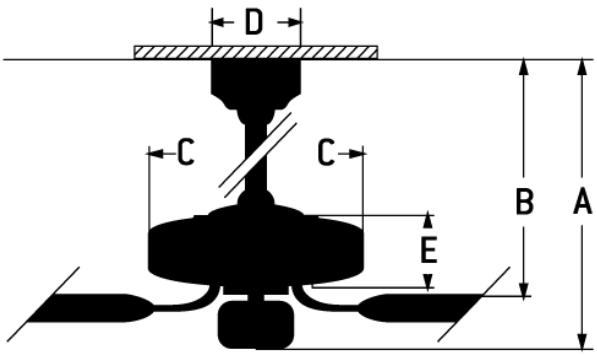

Downloads

Cavalier - CAV52AN5LK

PDF Tear Sheet

Installation Guide

Energy Guide

ENERGY INFORMATION
at High Speed

Airflow	Electricity Use	Airflow Efficiency
5513	**71**	**77**
Cubic Feet Per Minute	**Watts** (excludes lights)	**Cubic Feet Per Minute Per Watt**

Compare: 49" to 60" ceiling fans have airflow efficiencies ranging from approximately 51 to 176 cubic feet per minute per watt at high speed.

Money-Saving Tip: Turn off fan when leaving room

Craftmade • 650 S. Royal Lane • Coppell, TX 75019 • Privacy Policy • Site Map • © 2018 All Rights Reserved

PDFCROWD.COM