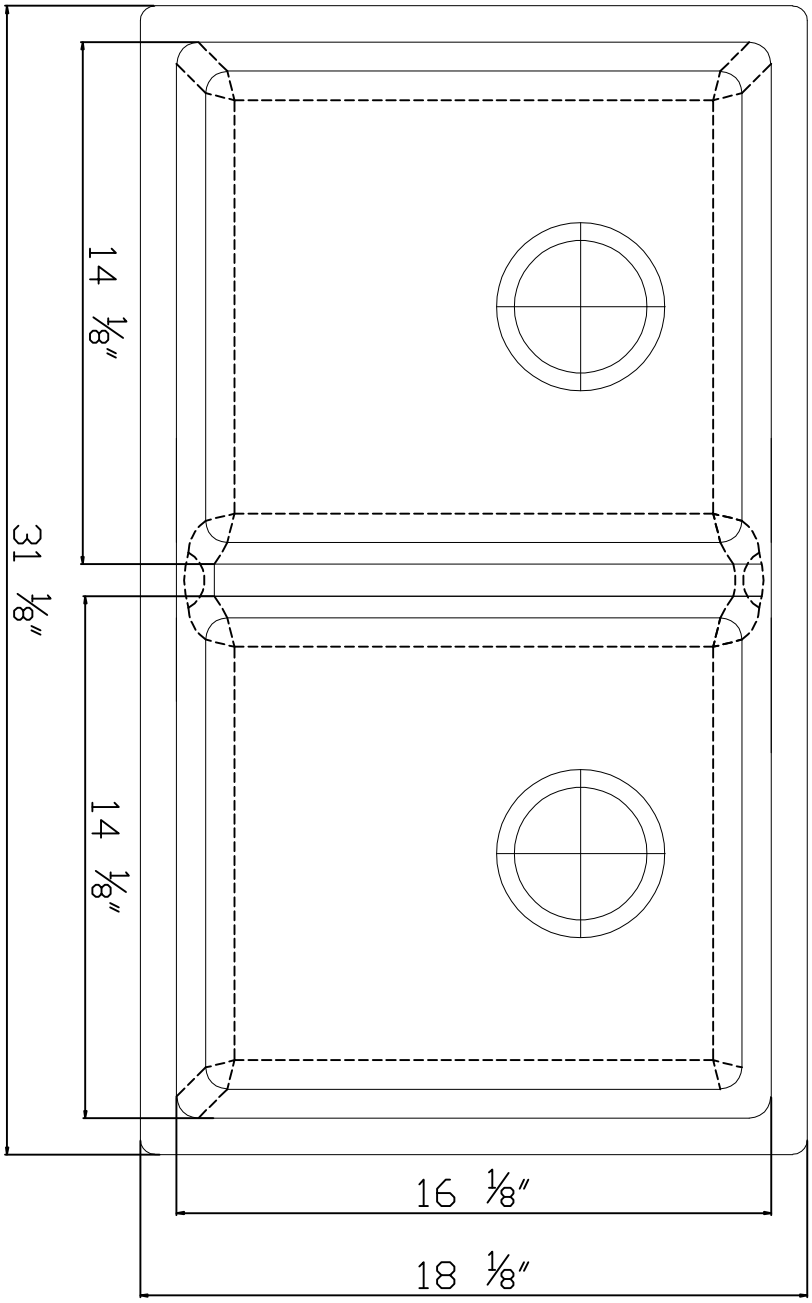
14 1/8"
31 1/8"
14 1/8"
16 1/8"
18 1/8"

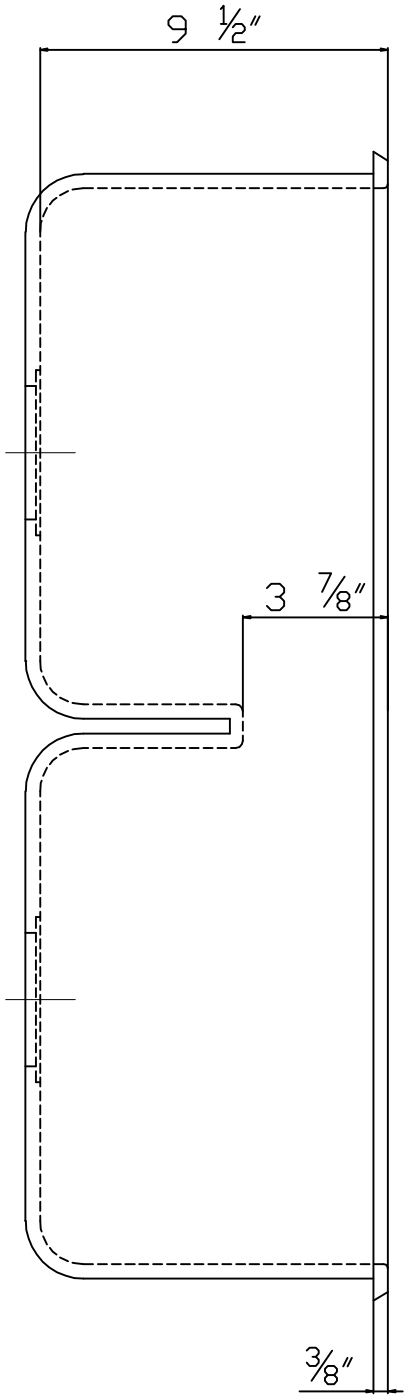
9 1/2"
3 7/8"
3/8"