MOEN

Buy it for looks. Buy it for life.®

Specifications

Model Number	Depth-Inches	Drain Placement	Model Specified
G16221	10	Center	

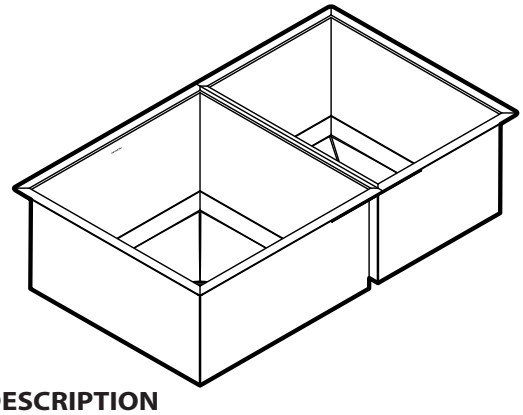

SINK DESCRIPTION

- 1600 Professional Series double bowl undermount
- 16 gauge stainless steel, Brushed finish
- Center drain
- Mounting brackets included, other standard mounting hardware and silicone sealant not included
- SoundSHIELD sound absorbing system

CUT OUT DIMENSIONS

- Cut out template available to download at moen.com

STANDARDS

- Third party certified by IAPMO to meet ASME A112.19.3/CSA B45.4 and all applicable specifications referenced

WARRANTY

- Limited lifetime warranty against material or manufacturing defects to the original consumer purchaser

CRITICAL DIMENSIONS

(DO NOT SCALE)

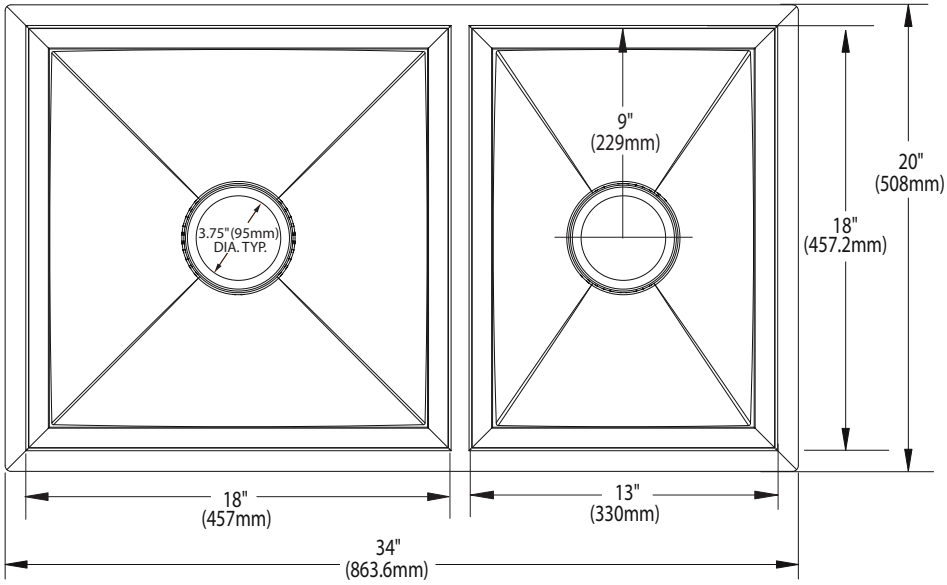

Installation Detail

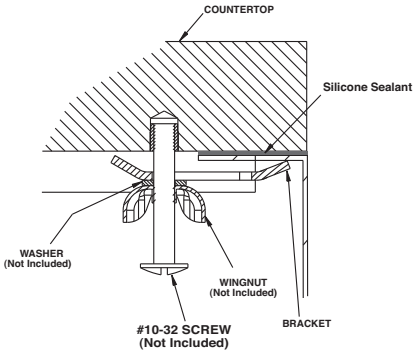

Rev. 6/16

FOR MORE INFORMATION CALL: 1-800-BUY-MOEN
www.moen.com

06/27/2016 SPC13851 500001375 66
Released 01