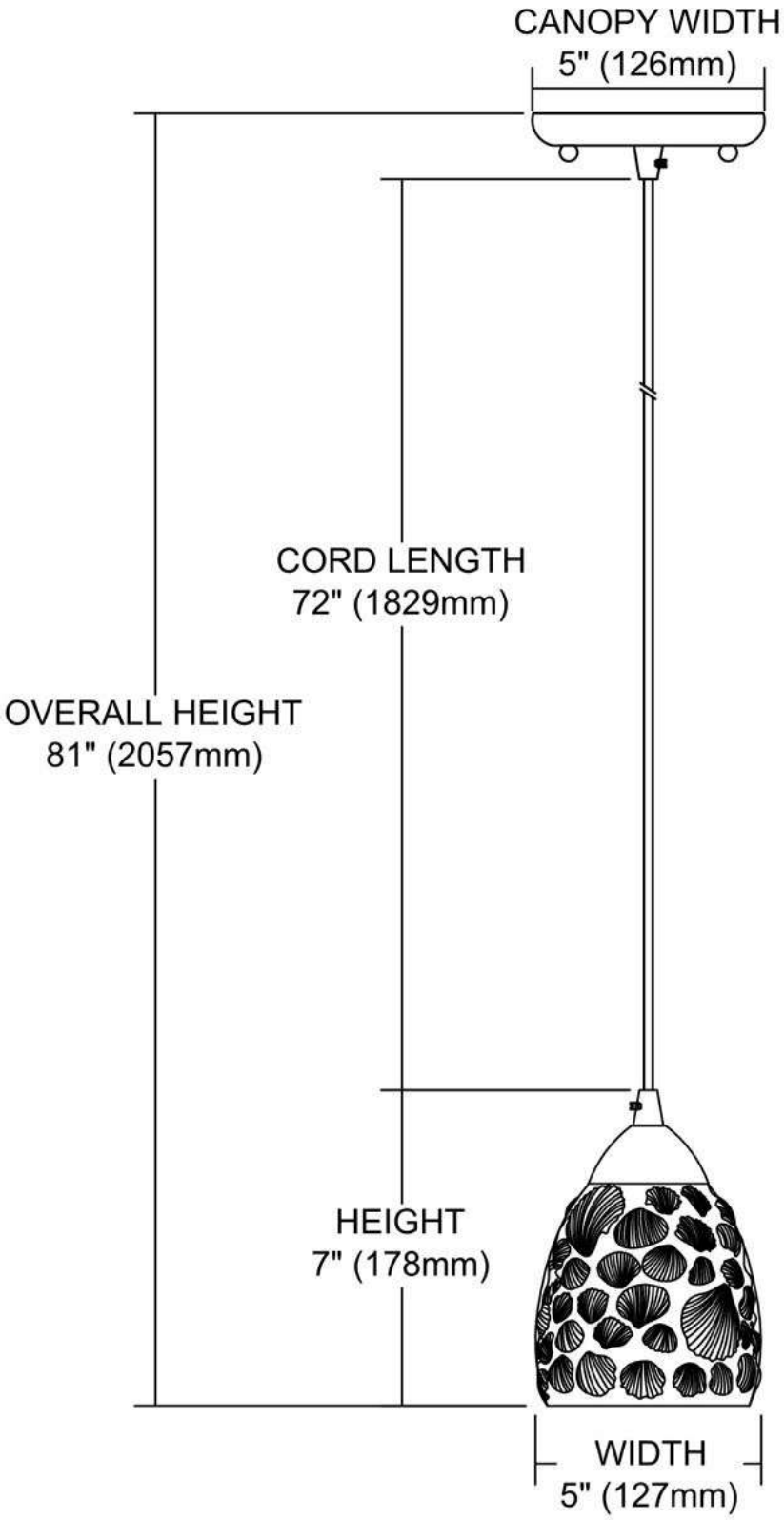
CANOPY WIDTH
5" (126mm)
CORD LENGTH
72" (1829mm)
OVERALL HEIGHT
81" (2057mm)
HEIGHT
7" (178mm)
WIDTH
5" (127mm)