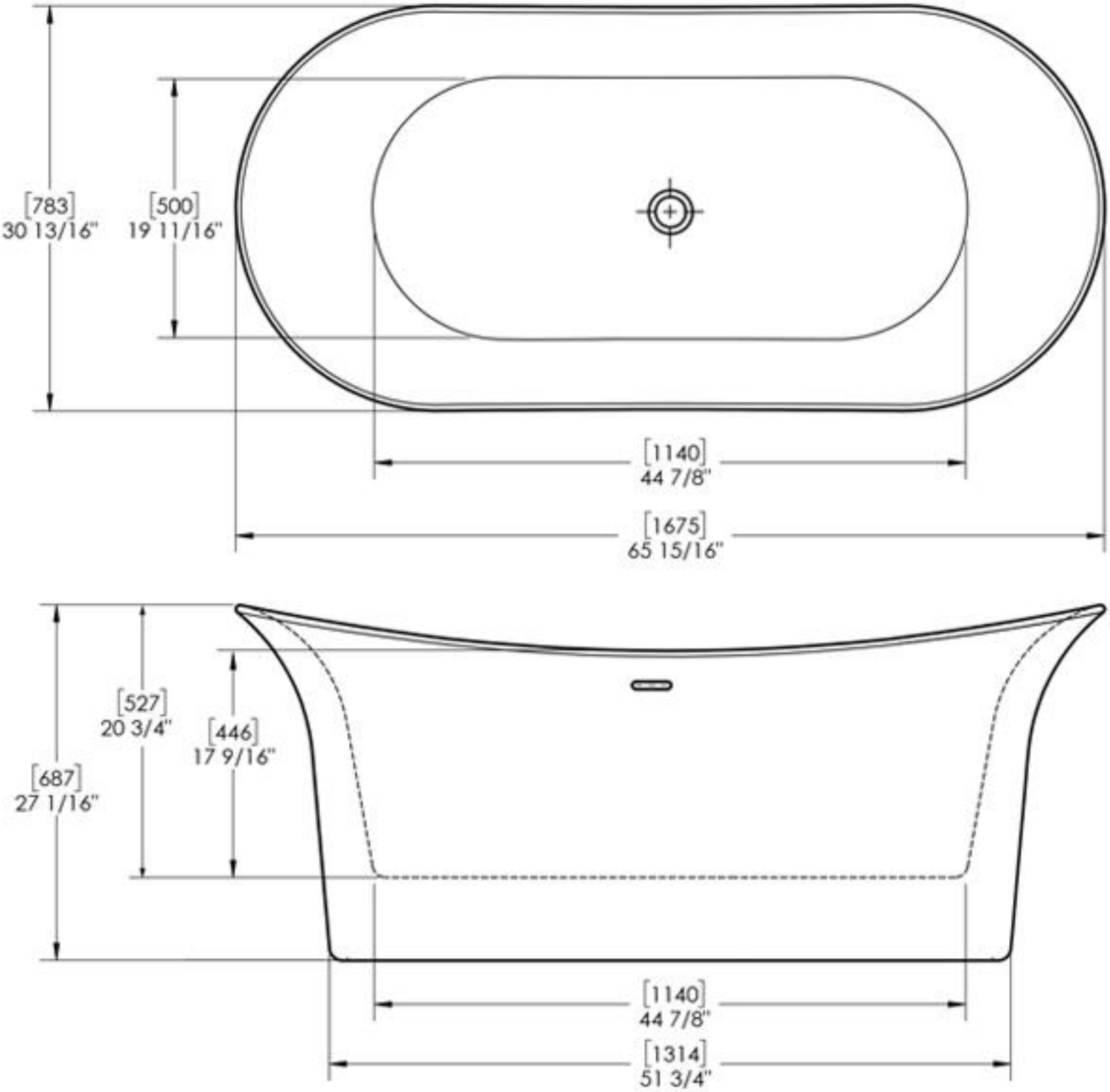
[783]
30 13/16"
[500]
19 11/16"
[1140]
44 7/8"
[1675]
65 15/16"
[527]
20 3/4"
[446]
17 9/16"
[687]
27 1/16"
[1140]
44 7/8"
[1314]
51 3/4"