NOCE 39″ Vanity Base

SIGNATURE SERIES
by RONBOW

Model : E031139

Designed By: **MATTEO THUN & ANTONIO RODRIGUEZ** | ITALY

Features :
2 UL approved electrical outlets and 2 USB ports with power switch in top drawer on right
2 push open/close, full-extension drawers with Hettich brand hardware
Glass bottom drawer box
Woven fiber drawer liners
Solid wood construction (no MDF)
Multi-step polyurethane finish resists moisture and scratches
Fully finished interiors
Push-open hardware
Leg levelers included
Wall mount optional
U.S. PATENT PENDING

All Ronbow cabinets are made of solid hardwood or hardwood plywood and meet strict CARB II Standards. No particle board or Micro-Density Fiberboard (MDF) are used.

Available Finish :
American Walnut with Glossy Black legs (E56)
American Walnut with Sabbia Beige drawer fronts and sides with Glossy Black legs (E90)

Top

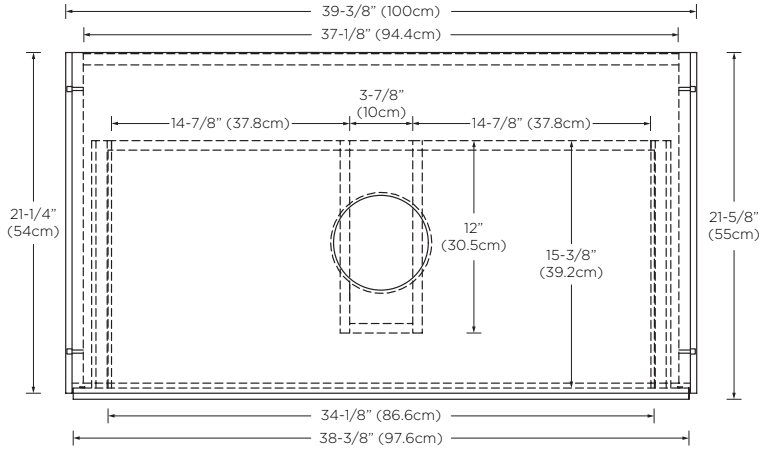

Front

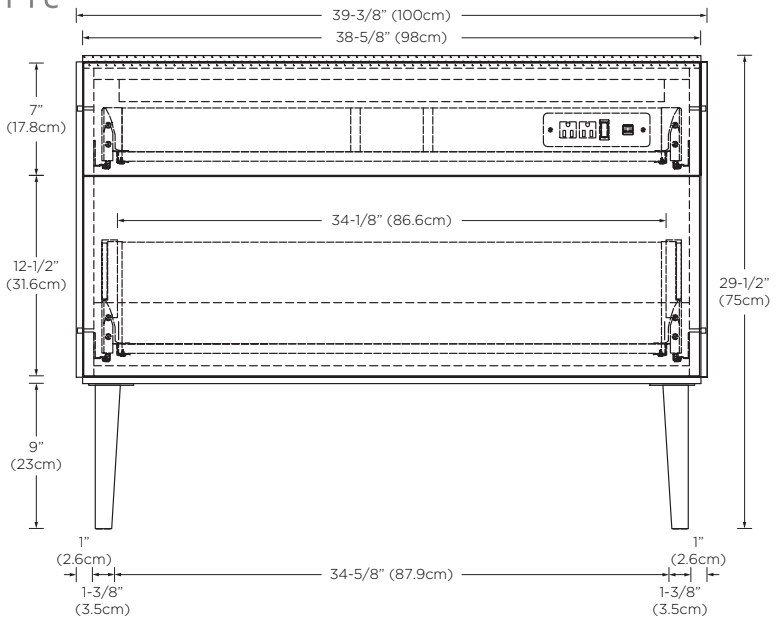
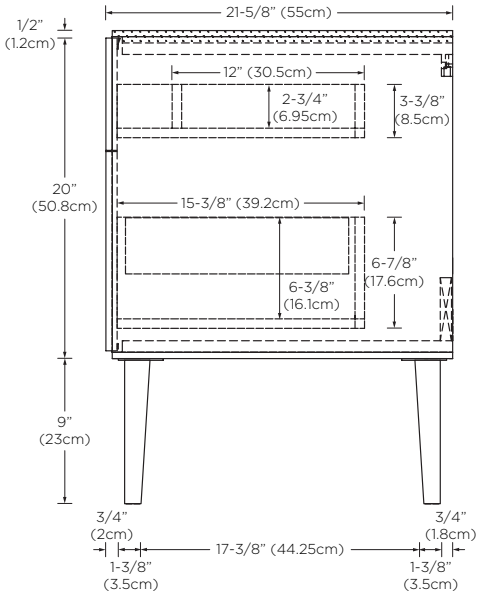
Side